Dear customer

LAPIS Semiconductor Co., Ltd. ("LAPIS Semiconductor"), on the 1st day of October, 2020, implemented the incorporation-type company split (shinsetsu-bunkatsu) in which LAPIS established a new company, LAPIS Technology Co., Ltd. (“LAPIS Technology”) and LAPIS Technology succeeded LAPIS Semiconductor’s LSI business.

Therefore, all references to "LAPIS Semiconductor Co., Ltd.", "LAPIS Semiconductor" and/or "LAPIS" in this document shall be replaced with "LAPIS Technology Co., Ltd."

Furthermore, there are no changes to the documents relating to our products other than the company name, the company trademark, logo, etc.

Thank you for your understanding.

LAPIS Technology Co., Ltd.
October 1, 2020

ROHM GROUP
LAPIS
SEMICONDUCTOR

FEBL62Q1714CRB-01

ML62Q1714C Reference Board User's Manual

Issue Date: September 30, 2019

ROHM
SEMICONDUCTOR

Notes

1) The information contained herein is subject to change without notice.

2) Although LAPIS Semiconductor is continuously working to improve product reliability and quality, semiconductors can break down and malfunction due to various factors. Therefore, in order to prevent personal injury or fire arising from failure, please take safety measures such as complying with the derating characteristics, implementing redundant and fire prevention designs, and utilizing backups and fail-safe procedures. LAPIS Semiconductor shall have no responsibility for any damages arising out of the use of our Products beyond the rating specified by LAPIS Semiconductor.

3) Examples of application circuits, circuit constants and any other information contained herein are provided only to illustrate the standard usage and operations of the Products. The peripheral conditions must be taken into account when designing circuits for mass production.

4) The technical information specified herein is intended only to show the typical functions of the Products and examples of application circuits for the Products. No license, expressly or implied, is granted hereby under any intellectual property rights or other rights of LAPIS Semiconductor or any third party with respect to the information contained in this document; therefore LAPIS Semiconductor shall have no responsibility whatsoever for any dispute, concerning such rights owned by third parties, arising out of the use of such technical information.

5) The Products are intended for use in general electronic equipment (i.e. AV/OA devices, communication, consumer systems, gaming/entertainment sets) as well as the applications indicated in this document.

6) The Products specified in this document are not designed to be radiation tolerant.

7) For use of our Products in applications requiring a high degree of reliability (as exemplified below), please contact and consult with a LAPIS Semiconductor representative: transportation equipment (i.e. cars, ships, trains), primary communication equipment, traffic lights, fire/crime prevention, safety equipment, medical systems, servers, solar cells, and power transmission systems.

8) Do not use our Products in applications requiring extremely high reliability, such as aerospace equipment, nuclear power control systems, and submarine repeaters.

9) LAPIS Semiconductor shall have no responsibility for any damages or injury arising from non-compliance with the recommended usage conditions and specifications contained herein.

10) LAPIS Semiconductor has used reasonable care to ensure the accuracy of the information contained in this document. However, LAPIS Semiconductor does not warrant that such information is error-free and LAPIS Semiconductor shall have no responsibility for any damages arising from any inaccuracy or misprint of such information.

11) Please use the Products in accordance with any applicable environmental laws and regulations, such as the RoHS Directive. For more details, including RoHS compatibility, please contact a ROHM sales office. LAPIS Semiconductor shall have no responsibility for any damages or losses resulting non-compliance with any applicable laws or regulations.

12) When providing our Products and technologies contained in this document to other countries, you must abide by the procedures and provisions stipulated in all applicable export laws and regulations, including without limitation the US Export Administration Regulations and the Foreign Exchange and Foreign Trade Act.

13) This document, in part or in whole, may not be reprinted or reproduced without prior consent of LAPIS Semiconductor.

Copyright 2019 LAPIS Semiconductor Co., Ltd.

LAPIS Semiconductor Co.,Ltd.

2-4-8 Shinyokohama, Kouhoku-ku,
Yokohama 222-8575, Japan
http://www.lapis-semi.com/en/

Preface

This manual describes about the ML62Q1714C Reference Board : RB-D62Q1714CTB52.

Refer to following documents when necessary.

- ML62Q1000 Series User's Manual (ML62Q1500C/1700C Group)
  Provides the detailed information about the microcontroller ML62Q1500C/1700C Group.

- EASE1000 User's Manual
  Provides the information on how to use the On-chip emulator EASE1000.
  EASE1000 in this document could be interpreted as EASE1000 V2 as well.

Table of Contents

1. Overview 1
1.1. Features 1
1.2. ML62Q1714C Reference Board Outline Diagram 2
2. Function of ML62Q1714C Reference Board 3
2.1. Power Circuit 3
2.2. Connection for EASE1000 (CNE) 4
2.3. LED (P20, P21, P22) 5
2.4. XT0/PIO0, XT1/PIO1 5
2.5. C1, C2, VL1, VL2, VL3 6
3. User Interface 7
4. Precaution for usage 8
5. PCB specification, BOM and Schematic 9
5.1. ML62Q1714C Reference Board PCB specification 9
5.2. ML62Q1714C Reference Board BOM 10
5.3. ML62Q1714C Reference Board Schematic 10
Revision History 12

1. Overview

1.1. Features

The ML62Q1714C Reference Board can be used for learning 'how to use' the ML62Q1714C, on which the user needs to provide additional external components if necessary. By using the ML62Q1714C Reference Board together with the LAPIS Semiconductor's on-chip emulator EASE1000 and the provided software development environment, the user can develop software, debug and program the Flash.

1.1.1. ML62Q1714C Reference Board features

- The board is provided with ML62Q1714C 52pin TQFP.
- Mounted with the linked connector to EASE1000.
- Through-holes for connecting the pins of LSI to external pheripheral boards.
- Power supply is selectable; supplied from the on-chip emulator EASE1000 or CN1_3pin /CN2_2pin.
- Mounted with LED (P20,P21,P22).
- Mounted with Crystal (32.768KHz)

1.1.2. ML62Q1714C Reference Board Hardware specifications

Table 1 shows the hardware specifications of ML62Q1714C Reference Board.

Table 1 ML62Q1714C Reference Board Hardware specifications

Mounted LSI	U1 : ML62Q1714C 52pin TQFP
Other Mounted components	PWR: Jumper for selecting the power supply input (3pin pin-header and short pin)
	J1: Jumper for selecting RESET_N pin (3pin pin-header and short pin)
	J2: Jumper for selecting P00/TEST0 pin (3pin pin-header and short pin)
	P20-P22: LEDs
	R1-R3: Resistors for LEDs by P20 to P22
	J3-J5: Jumper Chip for connecting LEDs
	X1, C3, C4: Crystal Oscillator (32.768kHz) and capacitors
	C5-C8: Capacitors for C1, C2, VL1, VL2, and VL3
	CNE: Connector for EASE1000 (14pin connector)
	C1, C2: Capacitors for VDD and VDDL
	R4: Pull-up resistor for RESET_N
Pads (or/and) Through holes for mounting components	CN1-CN2: Connectors for user application system (25pin, 2.54mm pitch, φ0.8mm)
Power check pin	VDD, VSS, UVDD: φ0.8mm
Operating voltage	+1.6V to +5.5V (Supply the VDD with up to 1.8V or higher during power up.)
Board size	55.88 mm x 93.98 mm

For more information about the connection of the mounted components, see the schematic.

1.2. ML62Q1714C Reference Board Outline Diagram

Fig. 1 shows the ML62Q1714C Reference Board.

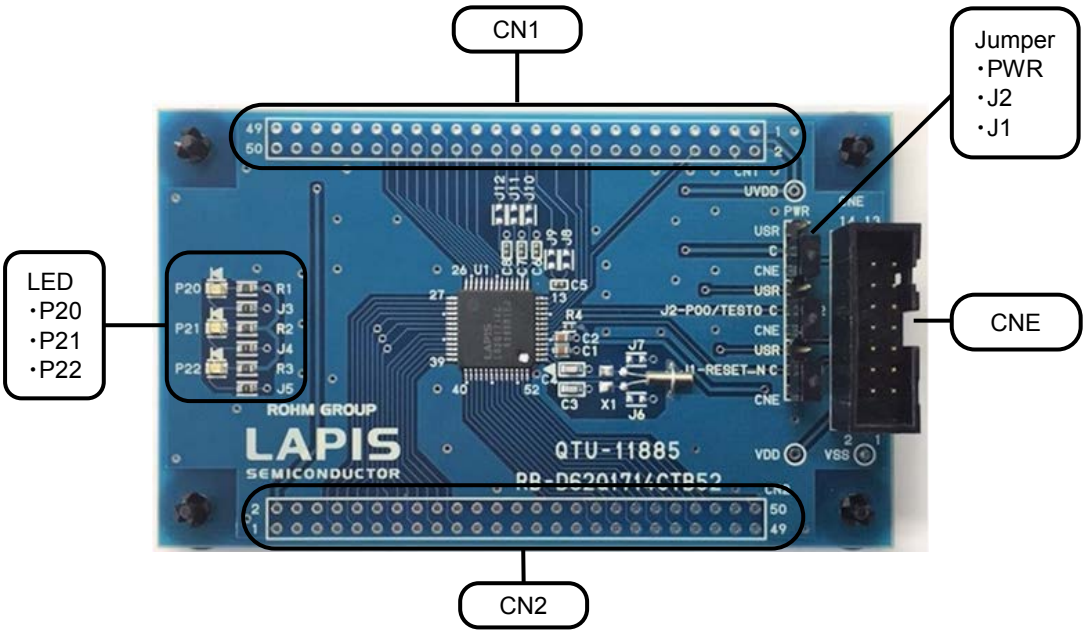

Fig. 1 ML62Q1714C Reference Board Outline Diagram

2. Function of ML62Q1714C Reference Board

2.1. Power Circuit

The input toV_{DD} can be selected from 3.3VOUT of EASE1000 or CN1_3pin / CN2_2pin by PWR jumper.

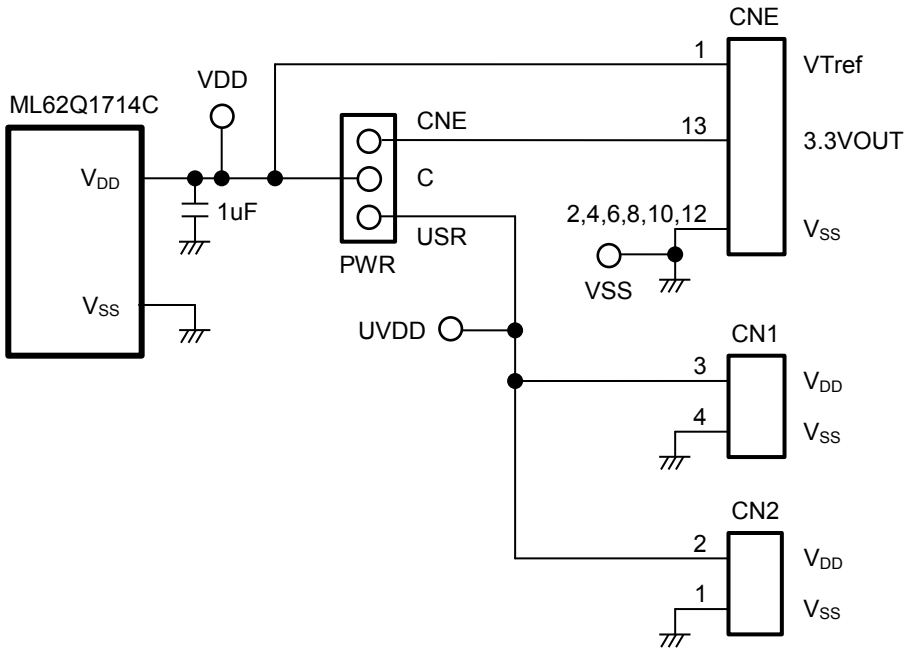

Fig. 2 Power Circuit

[Note]

The power supply ON/OFF procedure in case of setting PWR jumper to the USR-side when using EASE1000.

- The procedure of power supply ON
  1. The USB cable of EASE1000 is connected.
  2. The power supply of user's target system is turned on.

- The procedure of power supply OFF
  1. The power supply of user's target system is turned off
  2. The USB cable of EASE1000 is removed

2.2. Connection for EASE1000 (CNE)

EASE1000 can be used if J1 and J2 jumper are set to "CNE".

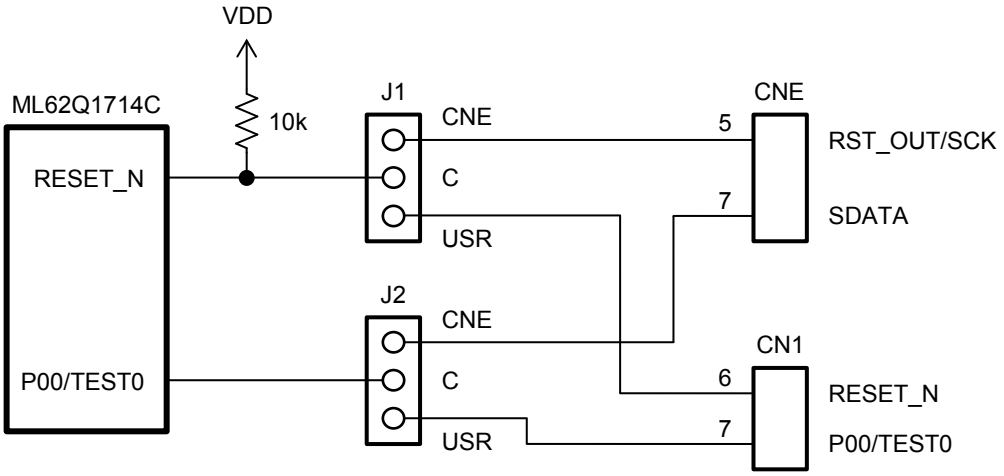

Fig. 3 EASE1000 Interface

[Note]

P00/TEST0 pin:

P00/TEST0 pin of ML62Q1714C is initially set as a pull-up input mode

When using EASE1000, do not set it as an output mode by using an application program, otherwise EASE1000 cannot communicate with the ML62Q1714C.

2.3. LED (P20, P21, P22)

The P20-P22 pins of the ML62Q1714C are ports that can directly drive LED. The Ports are connected to the LEDs through jumper-chip. Remove the jumper-chip when not using the LEDs.

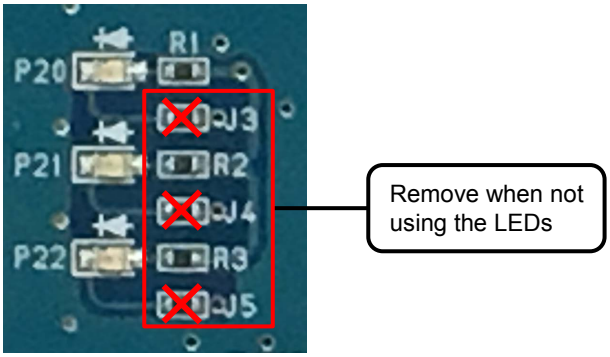

Fig. 4 Jumper-chip removal of LEDs

2.4. XT0/PIO0, XT1/PIO1

ML62Q1714C Reference Borad can be mounted with cylinder type or SMD type crystal oscillator.

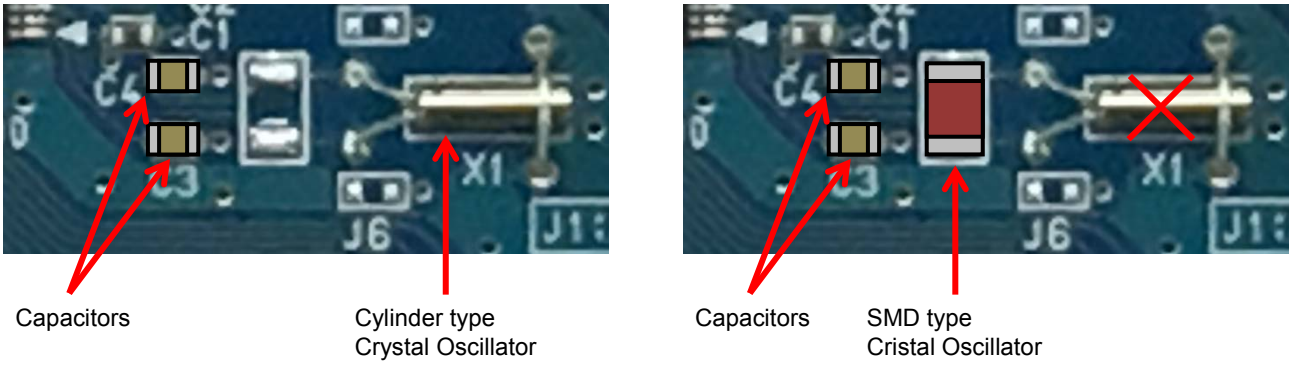

Fig. 5 Example of processing of Crystal Oscillator

2.5. C1, C2, VL1, VL2, VL3

C1, C2, VL1, VL2 and VL3 are connected to capacitor.
ML62Q1714C Reference Board cannot use J8, J9, J10, J11 and J12.
Therefore, please do not mount various parts on J8, J9, J10, J11 and J12.

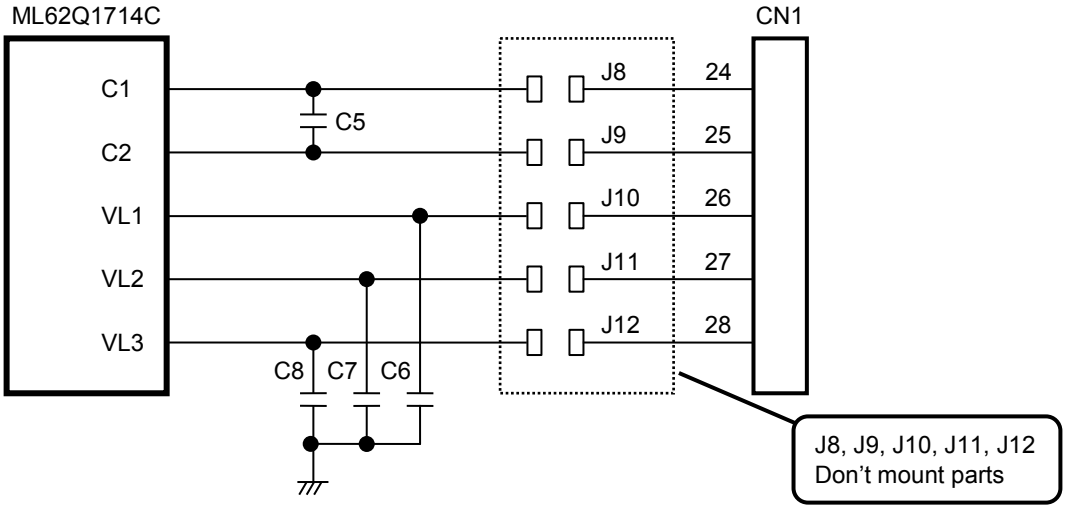

Fig. 6 C1-C2, VL1-VL3 Circuit

3. User Interface

Table 2 shows the pin list of the ML62Q1714C Reference Board user interface connection CN1 and CN2.

Table 2 ML62Q1714C Reference Board CN1/CN2

CN1	NAME	CN1	NAME	CN2	NAME	CN2	NAME
1	XT0/PIO0	26	P73	1	VSS	26	N.C.
2	XT1/PIO1	27	P72	2	VDD	27	N.C.
3	VDD	28	P71	3	N.C.	28	N.C.
4	VSS	29	N.C.	4	N.C.	29	N.C.
5	N.C.	30	P04	5	N.C.	30	N.C.
6	RESET_N	31	P05	6	N.C.	31	N.C.
7	P00/TEST0	32	P06	7	P14	32	N.C.
8	P01	33	P07	8	P15	33	P41
9	N.C.	34	P10	9	P16	34	P30
10	N.C.	35	P11	10	P17	35	P31
11	N.C.	36	P12	11	P20	36	P32
12	N.C.	37	P13	12	P21	37	P33
13	N.C.	38	P50	13	P22	38	P60
14	N.C.	39	P51	14	P23	39	P61
15	N.C.	40	N.C.	15	P24	40	P62
16	N.C.	41	N.C.	16	P25	41	P63
17	N.C.	42	N.C.	17	P26	42	P64
18	N.C.	43	N.C.	18	P27	43	P65
19	P02	44	N.C.	19	P56	44	P66
20	P03	45	N.C.	20	N.C.	45	N.C.
21	N.C.	46	N.C.	21	N.C.	46	N.C.
22	P47	47	N.C.	22	N.C.	47	N.C.
23	N.C.	48	N.C.	23	N.C.	48	N.C.
24	P75	49	N.C.	24	N.C.	49	N.C.
25	P74	50	N.C.	25	N.C.	50	P43

N.C. : Not Connected

4. Precaution for usage

(1) The ML62Q1714C Reference Board is an unfinished product and intended for research and development and for expert use in the research and development facility only. The ML62Q1714C Reference Board is not intended to be used for volume production or parts thereof.
(2) Since the content specified herein is subject to change for improvement without notice, confirm the latest content when using the board.
(3) See the other documents, the ML62Q1700 group user's manual and EASE1000 user's manual when using the ML62Q1714C Reference Board.
(4) Confirm the final electrical characteristics by using the mass production parts on your mass production boards.
(5) LAPIS supports replacing the board for an initial failure soon after the shipment. However LAPIS doesn't support reparing the board.
(6) ML62Q1714C Reference Board have signal patterns on the underside, it might work abnormally if using on conductive materials. Use it on insulating materials or having any preventable parts.

5. PCB specification, BOM and Schematic

5.1. ML62Q1714C Reference Board PCB specification

Fig. 7 shows the Reference Board PCB dimensional outline diagram and layout of components.

PCB part number:
RB-D62Q1714CTB52

Dimension:
55.88mm x 93.98mm

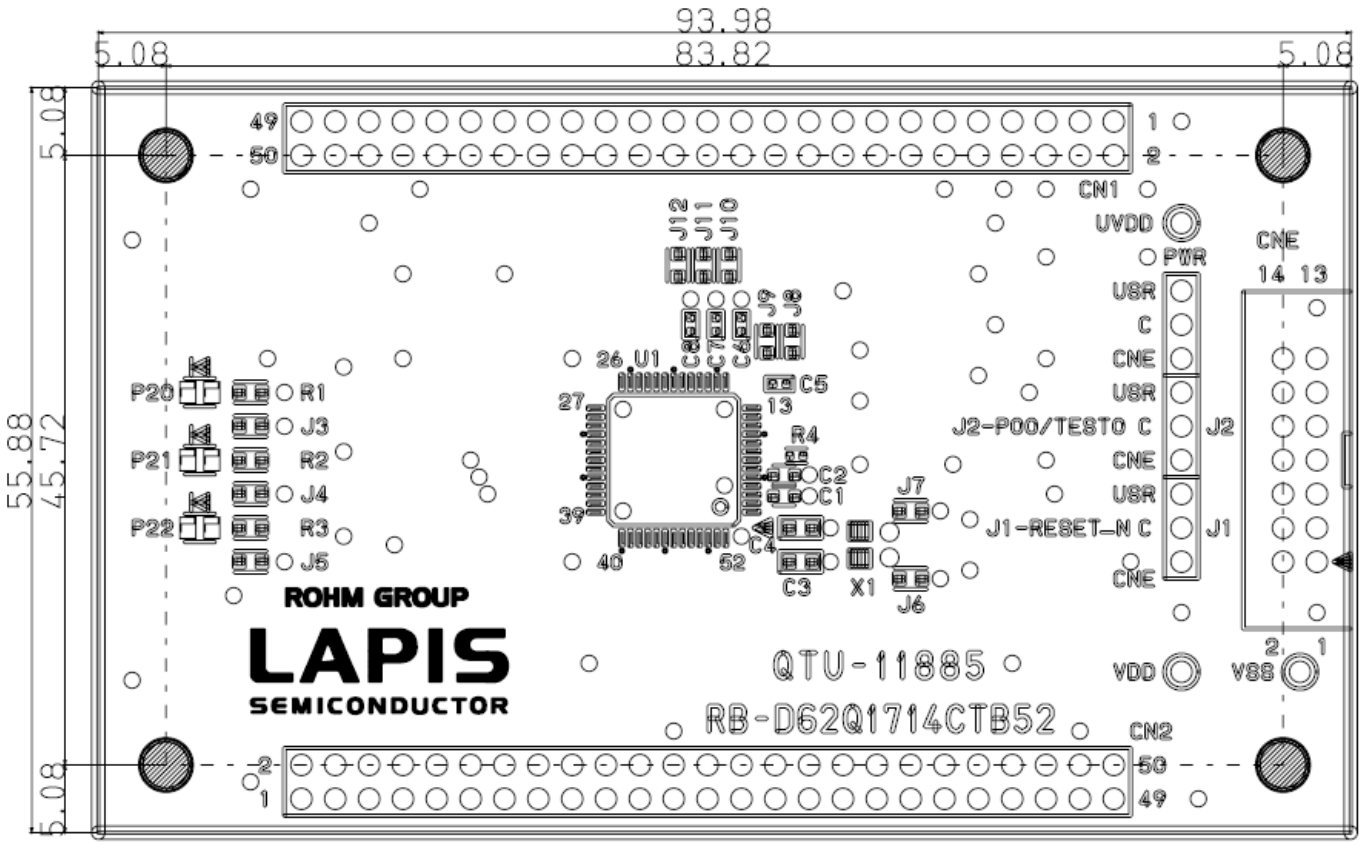

Fig. 7 Reference Board PCB dimensional outline diagram and layout of components (Top view)

5.2. ML62Q1714C Reference Board BOM

Table 3 Reference Board BOM

	Parts Number	Silk	Contents	Package Type	Qty.	Maker
1	QTU-11885	RB-D62Q1714CTB52	PWB	-	1	LAPIS
2	GMK107BJ105KA	C1,C2,C5,C6,C7,C8	Ceramic Capacitor 1uF/35V	1608(1.6x0.8mm)	6	TAIYO YUDEN
3	GRM1885C1H220J	C3, C4	Ceramic Capacitor 22pF/50V	1608(1.6x0.8mm)	2	MURATA
4	HIF3FC-14PA-2.54DSA(71)	CNE	14pin Header Connector	14PIN DIP	1	HIROSE
5	A2-3PA-2.54DSA	J1, J2, PWR	3pin Header Connector	3PIN DIP	3	HIROSE
6	MCR03ERTJ000	J3, J4, J5	Resistor 0Ω	1608(1.6x0.8mm)	3	ROHM
7	SML-H12P8T	P20, P21, P22	LED Green	2012(2.0x1.2mm)	3	ROHM
8	MCR03EZPJ271	R1, R2, R3	Resistor 270Ω	1608(1.6x0.8mm)	3	ROHM
9	MCR03EZPJ103	R4	Resistor 10kΩ	1608(1.6x0.8mm)	1	ROHM
10	ML62Q1714C-NNNTB	U1	16-bit Microcontroller	TQFP52	1	LAPIS
11	VT-200-F 12.5pF	X1	X'tal 32.768kHz 12.5pF	2PIN	1	SII
12	HIF3GA-2.54SP	-	Short pin	-	3	HIROSE
13	FF013-P3555-AR791	-	Rubber leg, Push rivet	-	4	KOYO FASTENER
14	-	CN1, CN2	Unmounted	50PIN DIP	2	-
15	-	J6, J7, J8, J9,J10, J11, J12	Unmounted	1608(1.6x0.8mm)	7	-
16	-	VDD, VSS, UVDD	Unmounted	φ0.8mm	3	

[Note]
- The diameter of through hole of CN1 and CN2 is 0.8 mm.
  Using CN1 and CN2, the diameter of connector pin should use the connector below 0.8mm, such as 0.5mm.
- The parts may be changed into another parts with equivalent part special quality.

5.3. ML62Q1714C Reference Board Schematic

The next page shows the schematic of ML62Q1714C Reference Board

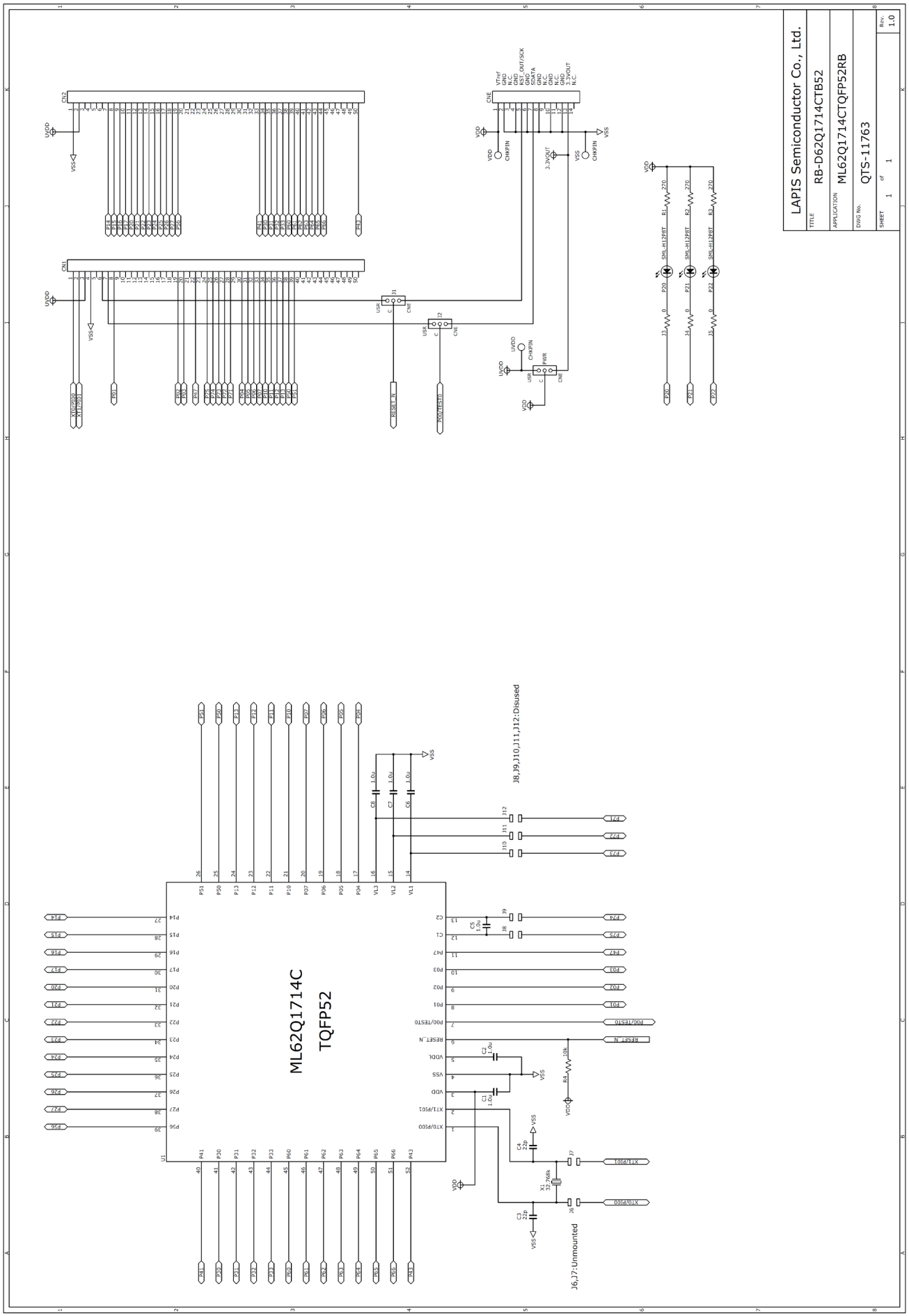
LAPIS Semiconductor Co., Ltd.
TITLE RB-D62Q1714CTB52
APPLICATION ML62Q1714CTQFP52RB
DWG No. QTS-11763
SHEET 1 of 1
Rev. 1.0
ML62Q1714C
TQFP52
J8,J9,J10,J11,J12:Disused
J6,J7:Unmounted

Revision History

Document No.	Issue Date	Page		Description
		Previous Edition	New Edition	
FEBL62Q1714CRB-01	September 30, 2019	–	–	First edition.