# Package Information : VQFN040V6060

## 1. Package Information

| | |
|---|---|
| Package Name | VQFN040V6060 |
| Type | QFN |
| Pin Count | 40 |
| Package Weight [g] | 0.094 |
| Lead Finish | Pure Tin |
| MSL | Level3 |

## 2. Package Structure

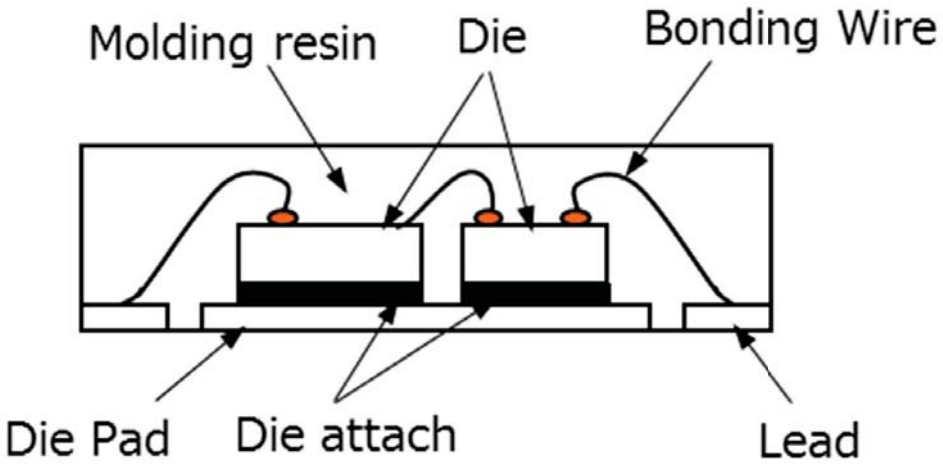



©2016 ROHM Co., Ltd. All rights reserved

## 3. Packing Specification

### 3.1 Packing form, Quantity, PIN1 Orientation

| | | |
|---|---|---|
| Packing Form | | Tape&Reel |
| Packing Quantity | [pcs] | 2000 |
| PIN 1 Orientation | | E2 |

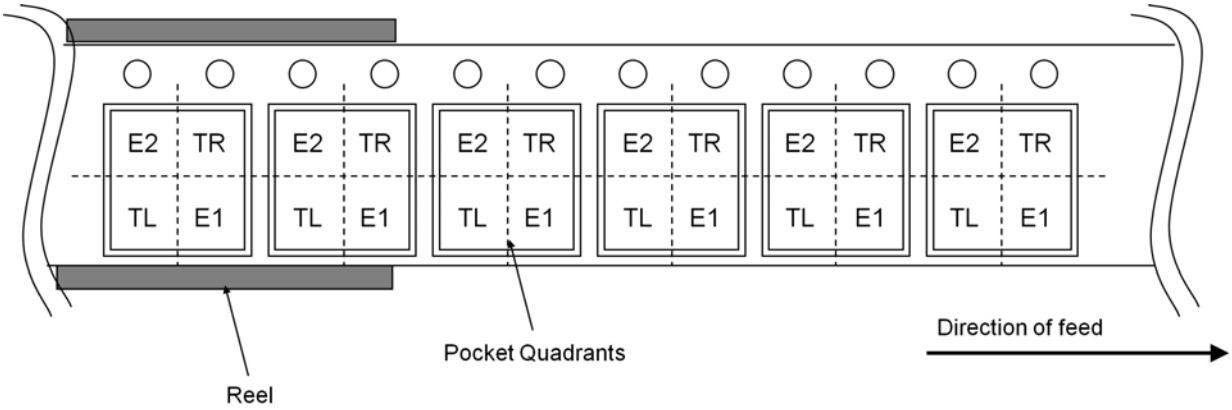


Fig.1 Quadrant Assignments for PIN 1 Orientation in Tape

E2 : PIN1 is placed to the top left corner. TR : PIN1 is placed to the top right corner.

TL : PIN1 is placed to the lower left. E1 : PIN1 is placed to the lower right.

### 3.2 Use material

| Item | Material |
|---|---|
| Embossed carrier tape | PS |
| Cover tape | PET+PE |
| Reel | PS |
| Desiccant | Clay |
| Envelope | Aluminum-laminated |
| Unit box | Cardboard |
| Shipping box | Cardboard |

### 3.3 Leader specification

No component pockets are 200 mm or more.

### 3.4 Trailer specification

No component pockets are 80 mm or more. Tape is free from reel.

### 3.5 Peelback strength

Cover tape peelback strength is 0.2 N to 0.7 N.

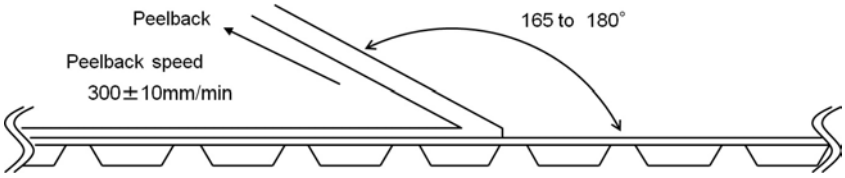


Fig. 2 Test method

### 3.6 Missing Ics

(1) No consecutive dropouts.

(2) A maximun 0.1 % of specified number of products in each packing may be missing.


©2016 ROHM Co., Ltd. All rights reserved

3.7 Tape and Reel Specification

3.7.1 Tape Dimension

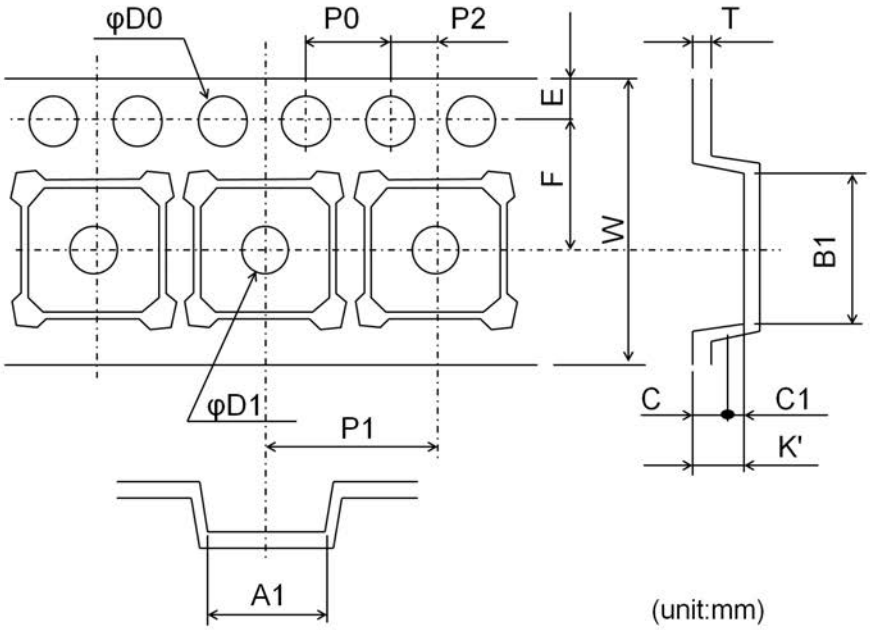


| | Tape Dimension | Tape Tolerance |
|---|---|---|
| A1 | 6.20 | ±0.05 |
| B1 | 6.20 | ±0.05 |
| C | 1.15 | - |
| C1 | 0.65 | - |
| D0 | φ1.5 | +0.1/-0 |
| D1 | φ1.5 | ±0.1 |
| E | 1.75 | ±0.1 |
| F | 5.50 | ±0.1 |
| K' | 1.80 | ±0.1 |
| P0 | 4.00 | ±0.1 |
| P1 | 8.00 | ±0.1 |
| P2 | 2.00 | ±0.1 |
| T | 0.30 | ±0.05 |
| W | 12.0 | ±0.3 |


©2016 ROHM Co., Ltd. All rights reserved

3.7.2 Reel Dimension

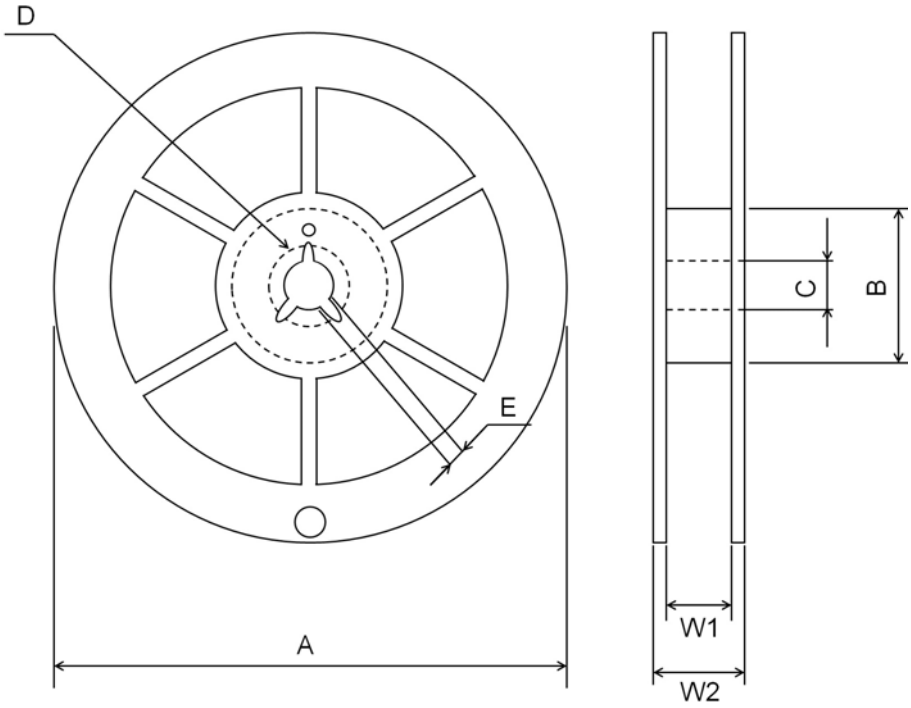


(unit:mm)

| | Reel Dimension | Reel Tolerance |
|---|---|---|
| A | 330 | ±2.0 |
| B | 80 | ±1.0 |
| C | 13 | ±0.2 |
| D | 21 | ±0.8 |
| E | 2 | ±0.5 |
| W1 | 13.5 | ±1.0 |
| W2 | 17.5 | ±1.0 |


©2016 ROHM Co., Ltd. All rights reserved

3.8 Packing Method

1 reel(s) or less per unit box

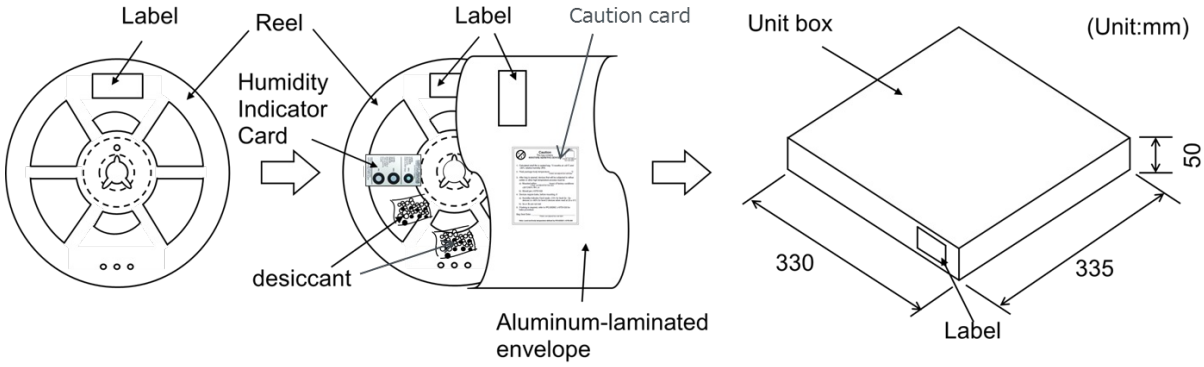


3.9 Packing Style

5 unit boxes or less per shipping box

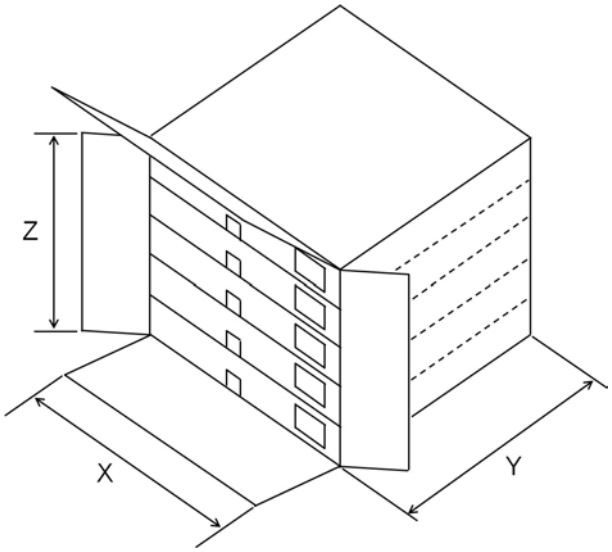


(unit:mm)

| Shipping Box Dimension | |
|---|---|
| X | 347 |
| Y | 353 |
| Z | 287 |

3.10 Label Specification

**Label Example**


©2016 ROHM Co., Ltd. All rights reserved

3.11 Caution card specification

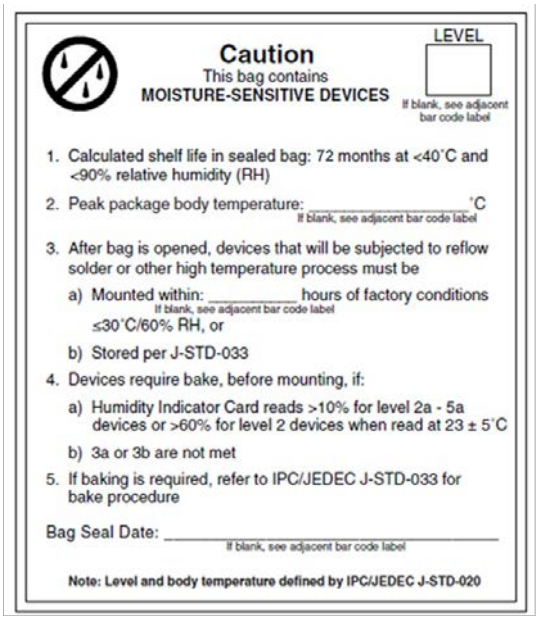

**Caution**
This bag contains
**MOISTURE-SENSITIVE DEVICES**

LEVEL
If blank, see adjacent bar code label

1. Calculated shelf life in sealed bag: 72 months at <40˚C and <90% relative humidity (RH)
2. Peak package body temperature: _____ ˚C
   If blank, see adjacent bar code label
3. After bag is opened, devices that will be subjected to reflow solder or other high temperature process must be
   a) Mounted within: _____ hours of factory conditions
      If blank, see adjacent bar code label
      ≤30˚C/60% RH, or
   b) Stored per J-STD-033
4. Devices require bake, before mounting, if:
   a) Humidity Indicator Card reads >10% for level 2a - 5a devices or >60% for level 2 devices when read at 23 ± 5˚C
   b) 3a or 3b are not met
5. If baking is required, refer to IPC/JEDEC J-STD-033 for bake procedure

Bag Seal Date: _____
If blank, see adjacent bar code label

**Note: Level and body temperature defined by IPC/JEDEC J-STD-020**

Remark ) Standard item 1. calculated shelf life in caution card is not applied for MSL1 product.

3.12 Indicator card specification

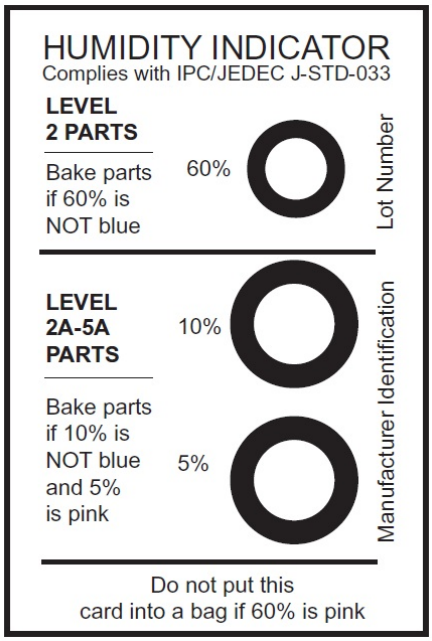

HUMIDITY INDICATOR
Complies with IPC/JEDEC J-STD-033

**LEVEL 2 PARTS**
Bake parts if 60% is NOT blue
60%

**LEVEL 2A-5A PARTS**
Bake parts if 10% is NOT blue and 5% is pink
10%
5%

Lot Number
Manufacturer Identification

Do not put this card into a bag if 60% is pink


©2016 ROHM Co., Ltd. All rights reserved

4. Footprint dimensions

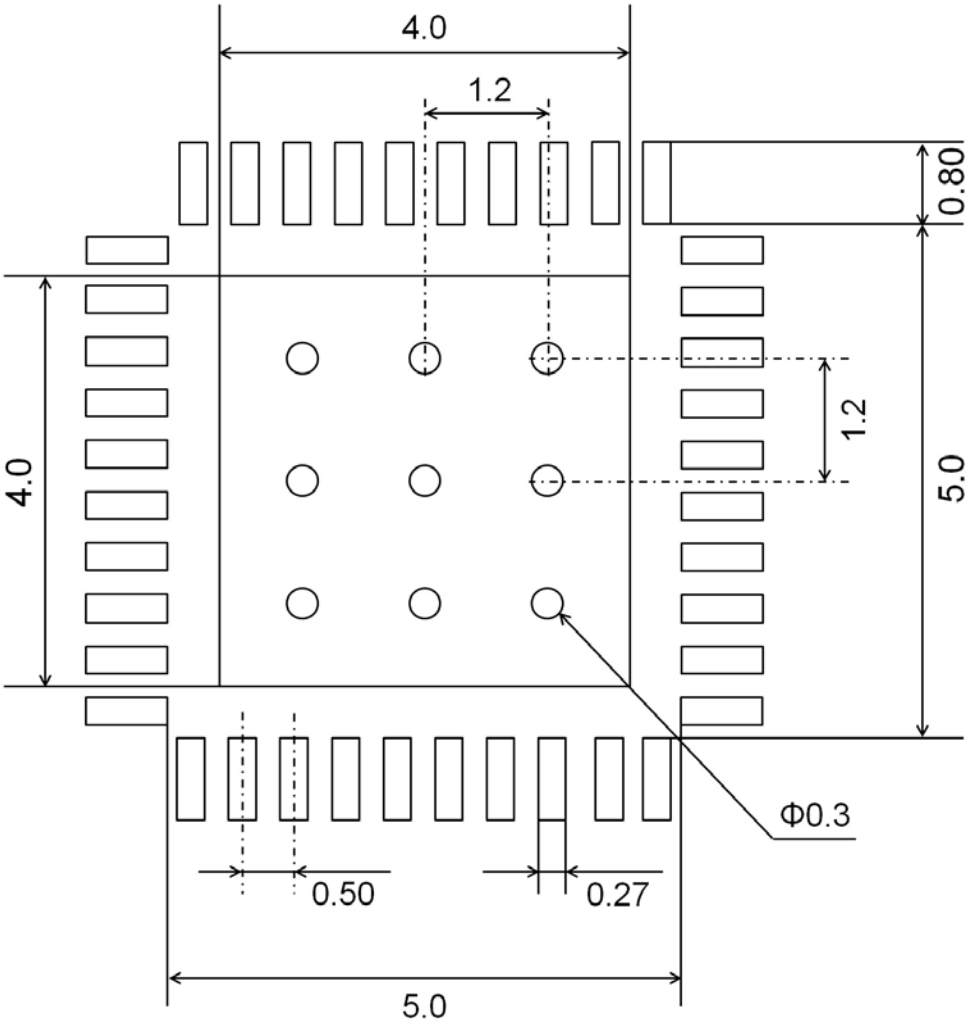


(unit:mm)

In actual design, please optimize in accordance with the situation of your board design and soldering condition.


©2016 ROHM Co., Ltd. All rights reserved

## 5. Marking Specification

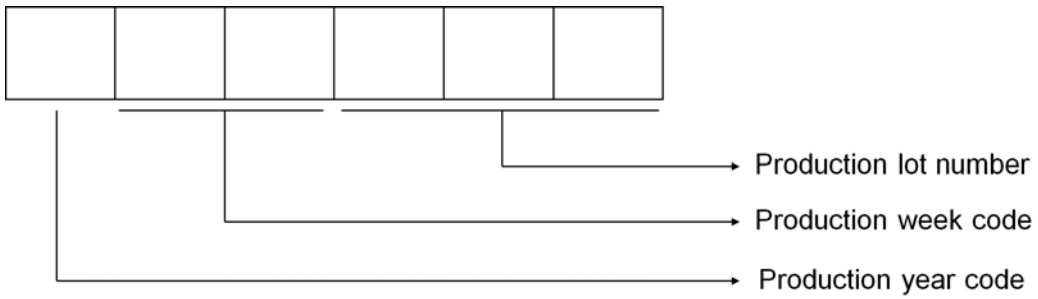


## 6. Storage conditions

### 6.1 Storage environment

Recommended storage conditions

| | Min. | Max. | Unit |
|---|---|---|---|
| Temperature | 5 | 30 | °C |
| Humidity | - | 70 | % RH |

### 6.2 Storage period(Start to count since delivery date)

| | Min. | Max. | Unit |
|---|---|---|---|
| Storage period | - | 1 | year |

### 6.3 Specified storage period until soldering

| | Min. | Max. | Unit |
|---|---|---|---|
| Acceptable time | - | 168 | h |

The above value is a time from opening the moisture-proof packaging until the soldering.Cases where it is necessary to perform the drying process is the following.

Case 1 : in excess of the above-mentioned "Acceptable time"

Case 2 : it has passed more than 6 years not open

Recommended the dry process conditions

| | Temperature [°C] | Time [h] |
|---|---|---|
| Reel*(Note1)* | 60 | 72 |
| Other Heat-proof container | 125 | 24 |

*(Note1) When carrying out the dry process in a "Reel" state, the peelback strength will change. Please refer to the following values:*

| | Min. | Max. | Unit |
|---|---|---|---|
| Peelback strength | 0.2 | 0.9 | N |

The drying process is the impact on the solderability because the oxidation of the terminal portion will occur. Therefore, specify the maximum times of the dry processing as follows:

Recommended execution count of the dry process

| | | Unit |
|---|---|---|
| Reel | 1 | times |
| Other Heat-proof container | 2 | times |


©2016 ROHM Co., Ltd. All rights reserved

## 7. Soldering conditions

### 7.1 Recommended temperature profile for reflow

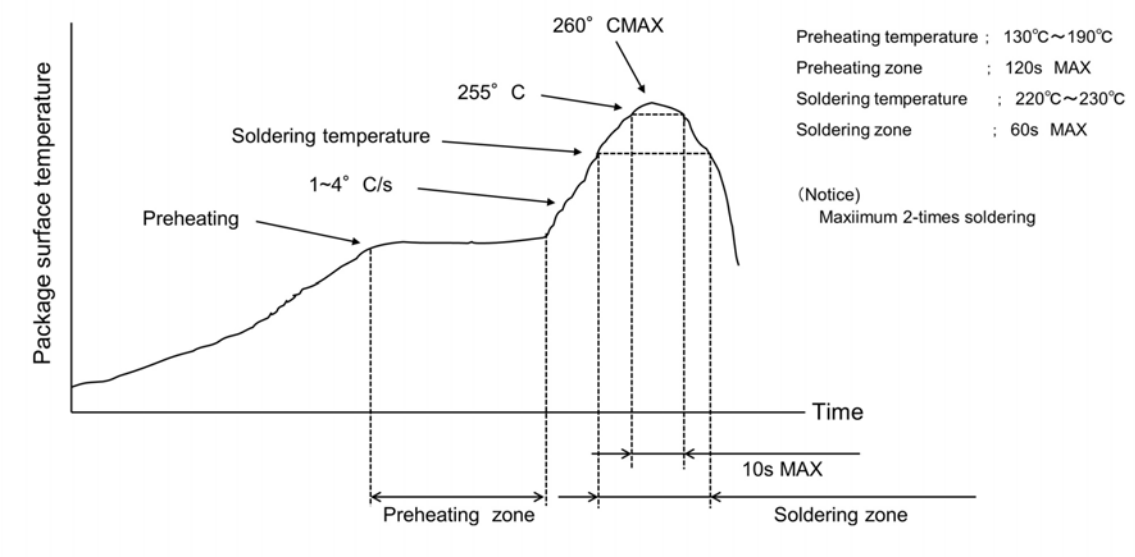


### 7.2 For wave soldering

The wave soldering method is not supported.

### 7.3 For solder iron

Rework by soldering iron is not allowed or it may cause mold crack and terminal open.

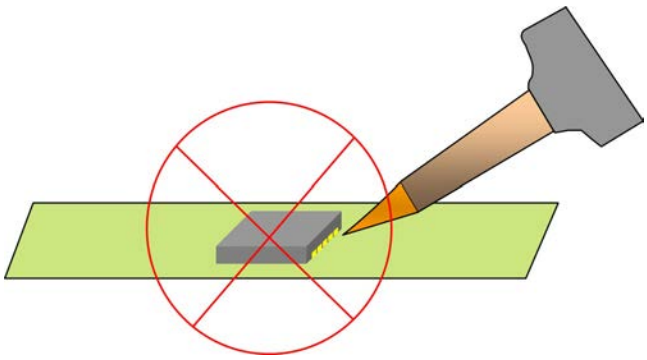


©2016 ROHM Co., Ltd. All rights reserved

## 7.4 Caution for solder mounting

### 7.4.1 For mounting on flexible film

Mounting on flexible film, film bend may occur lack of lead from package, usage of support board and under fill is recommended.

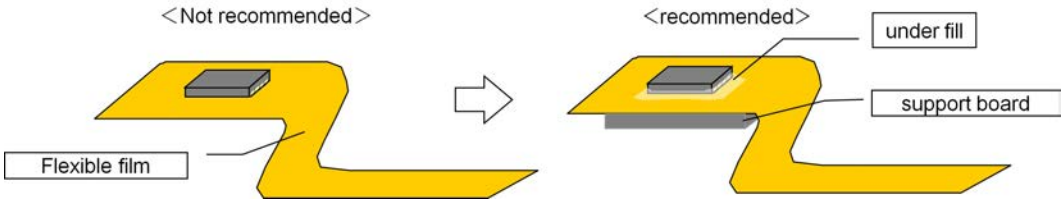


### 7.4.2 For Mounting long and narrow board

Mounting on long and narrow board, bending stress may occur a luck of lead from package, bending board direction and outer lead direction is recommended as drawing (vertically layout) and under fill usage is recommended.

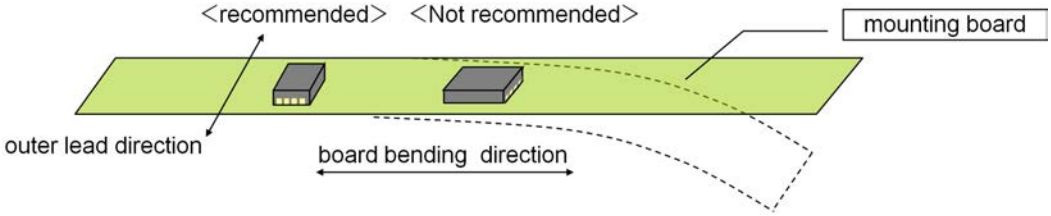



©2016 ROHM Co., Ltd. All rights reserved

## Notes

1) The information contained herein is subject to change without notice.

2) Before you use our Products, please contact our sales representative and verify the latest specifications :

3) Although ROHM is continuously working to improve product reliability and quality, semiconductors can break down and malfunction due to various factors.
Therefore, in order to prevent personal injury or fire arising from failure, please take safety measures such as complying with the derating characteristics, implementing redundant and fire prevention designs, and utilizing backups and fail-safe procedures. ROHM shall have no responsibility for any damages arising out of the use of our Poducts beyond the rating specified by ROHM.

4) Examples of application circuits, circuit constants and any other information contained herein are provided only to illustrate the standard usage and operations of the Products. The peripheral conditions must be taken into account when designing circuits for mass production.

5) The technical information specified herein is intended only to show the typical functions of and examples of application circuits for the Products. ROHM does not grant you, explicitly or implicitly, any license to use or exercise intellectual property or other rights held by ROHM or any other parties. ROHM shall have no responsibility whatsoever for any dispute arising out of the use of such technical information.

6) The Products are intended for use in general electronic equipment (i.e. AV/OA devices, communication, consumer systems, gaming/entertainment sets) as well as the applications indicated in this document.

7) The Products specified in this document are not designed to be radiation tolerant.

8) For use of our Products in applications requiring a high degree of reliability (as exemplified below), please contact and consult with a ROHM representative : transportation equipment (i.e. cars, ships, trains), primary communication equipment, traffic lights, fire/crime prevention, safety equipment, medical systems, servers, solar cells, and power transmission systems.

9) Do not use our Products in applications requiring extremely high reliability, such as aerospace equipment, nuclear power control systems, and submarine repeaters.

10) ROHM shall have no responsibility for any damages or injury arising from non-compliance with the recommended usage conditions and specifications contained herein.

11) ROHM has used reasonable care to ensur the accuracy of the information contained in this document. However, ROHM does not warrants that such information is error-free, and ROHM shall have no responsibility for any damages arising from any inaccuracy or misprint of such information.

12) Please use the Products in accordance with any applicable environmental laws and regulations, such as the RoHS Directive. For more details, including RoHS compatibility, please contact a ROHM sales office. ROHM shall have no responsibility for any damages or losses resulting non-compliance with any applicable laws or regulations.

13) When providing our Products and technologies contained in this document to other countries, you must abide by the procedures and provisions stipulated in all applicable export laws and regulations, including without limitation the US Export Administration Regulations and the Foreign Exchange and Foreign Trade Act.

14) This document, in part or in whole, may not be reprinted or reproduced without prior consent of ROHM.

Thank you for your accessing to ROHM product informations.
More detail product informations and catalogs are available, please contact us.

ROHM Customer Support System

http://www.rohm.com/contact/


© 2015 ROHM Co., Ltd. All rights reserved.