Package Information : VCSP50L1 BD27400GUL

1. Package Information

Package Name		VCSP50L1
Package Weight	[mg]	2.3
MSL*(Note 1)*		MSL1

Note 1 : The MSL Level are determined based on the JEDEC J-STD-020.

2. Pacakage Structure

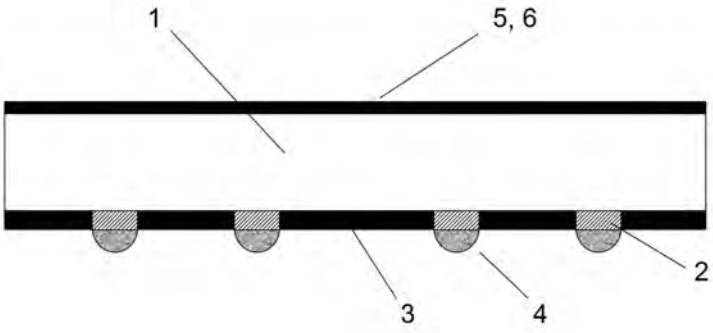

No.	Item	Materials
1	Die	Silicon
2	Cu Post	Cu
3	Mold Compound	Epoxy Resin
4	Ext. terminal	Sn-3Ag-0.5Cu Solder
5	Mold Compound	Polyamide-imide Resin
6	Marking	Laser Marking

© 2019 ROHM Co., Ltd. All rights reserved

3. Packing Specification

3.1 Packing form, Quantity, PIN1 Orientation and Weight

Packing Form		Tape&Reel
Packing Quantity	[pcs/Reel]	3,000
PIN 1 Orientation		E2

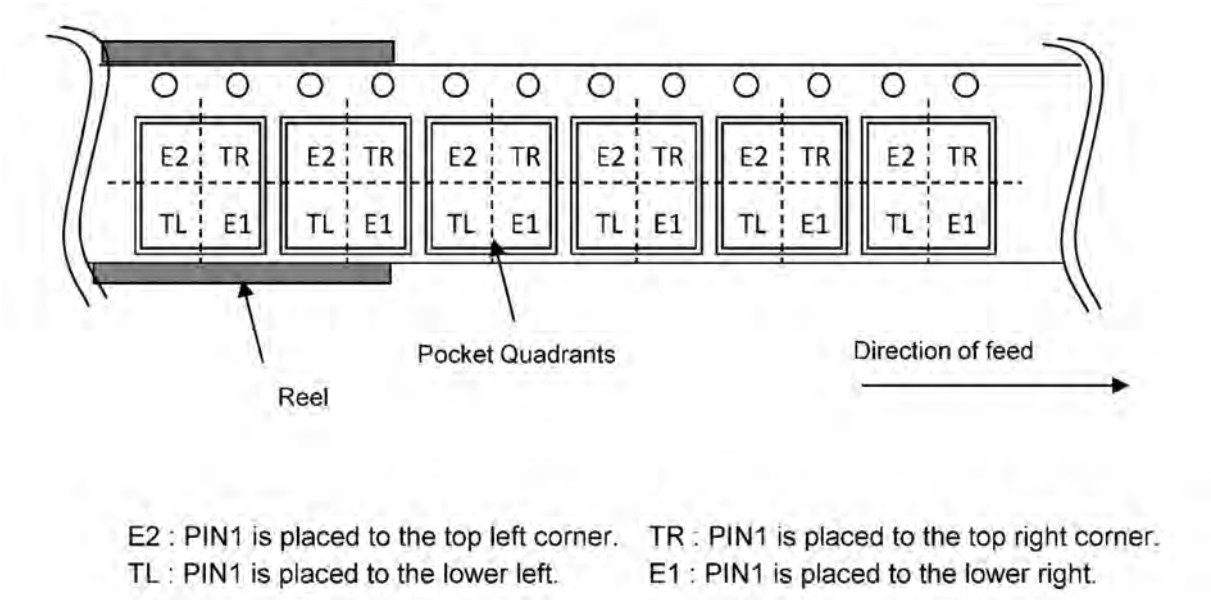

3.2 Use material

Item	Material
Embossed carrier tape	PS (antistatic)
Cover tape	PET+PE (antistatic)
Reel	PS (antistatic)
Unit box	Cardboard
Shipping box	Cardboard

3.3 Leader specification

No component pockets are 100 pockets (400 mm) or more.

3.4 Trailer specification

No component pockets are 40 pockets (160 mm) or more. Tape is free from reel.

3.5 Peelback strength

Cover tape peelback strength is 0.2 N to 0.7 N.

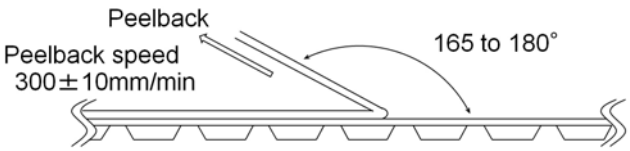

3.6 Missing ICs

(1) No consecutive dropouts.

(2) A maximun 0.1 % of specified number of products in each packing may be missing.

© 2019 ROHM Co., Ltd. All rights reserved

3.7 Tape and Reel Specification

3.7.1 Tape Dimension

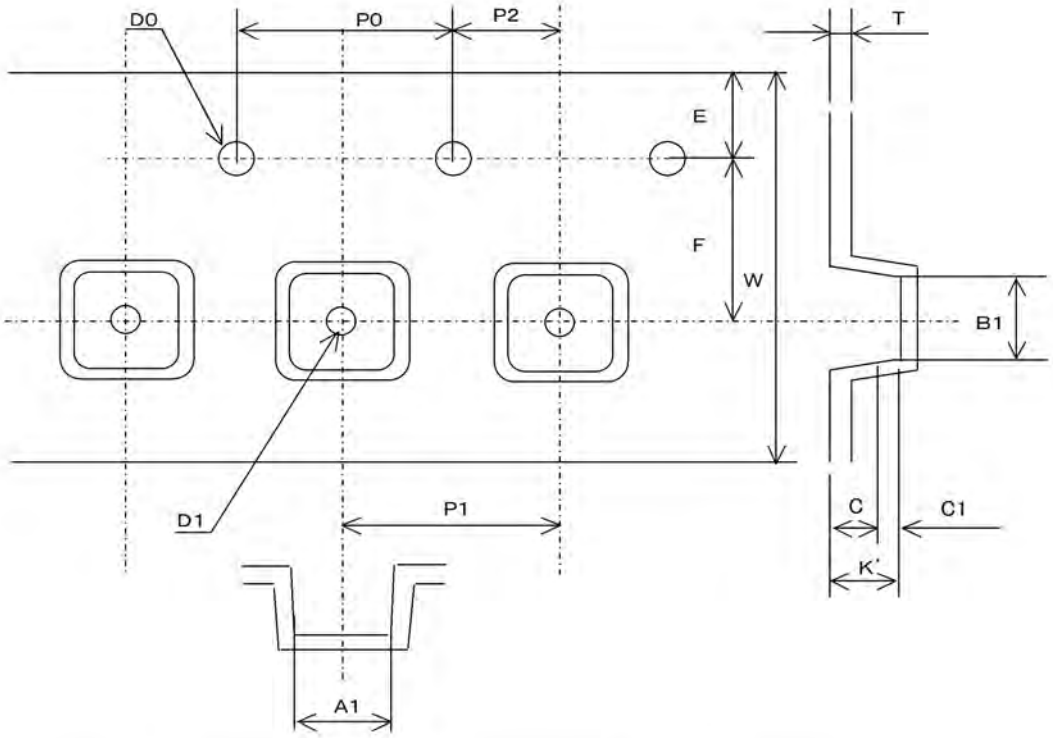

Symbol	Dimension	Tolerance
A1	1.74	±0.1
B1	1.74	±0.1
C	(0.6)	
C1	(0.25)	
D0	ϕ1.5	+0.1 -0
D1	ϕ0.8	±0.1
E	1.75	±0.1
F	3.5	±0.1
K'	0.85	±0.1
P0	4.0	±0.1
P1	4.0	±0.1
P2	2.0	±0.1
T	0.3	±0.05
W	8.0	±0.3

(mm)

© 2019 ROHM Co., Ltd. All rights reserved

3.7.2 Reel Dimension

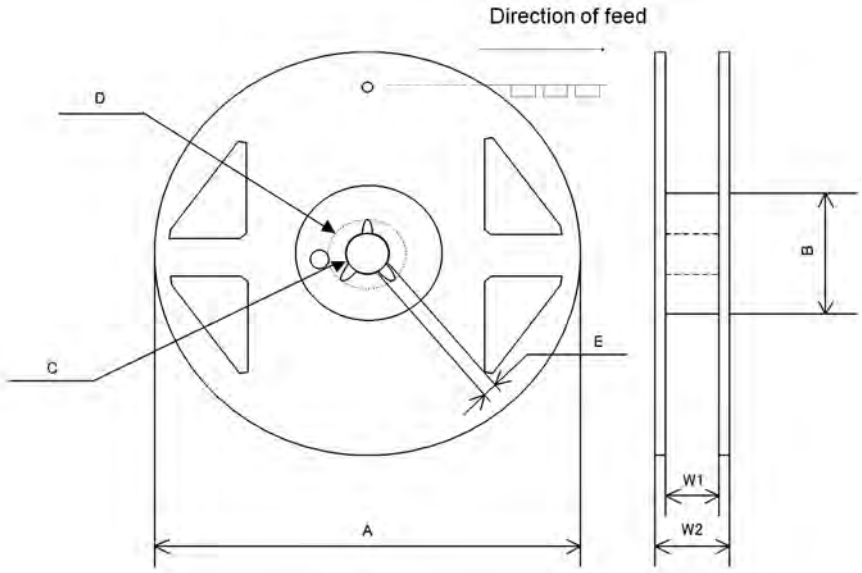

Symbol	Dimension	Tolerance
A	ϕ180	+0 -1.5
B	60	MIN
C	ϕ13.0	±0.2
D	ϕ20.2	MIN
E	1.5	MIN
W1	9.0	+1.0 -0
W2	11.4	±1.0

(mm)

© 2019 ROHM Co., Ltd. All rights reserved

3.8 Packing Method

4 reels or less per unit box.

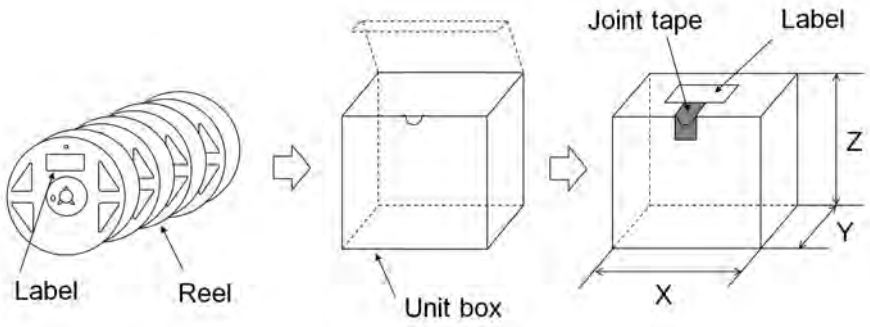

Unit box

Symbol	Dimension
X	183
Y	57
Z	182

(mm)

3.9 Packing Style

4 unit boxes or less per shipping box.

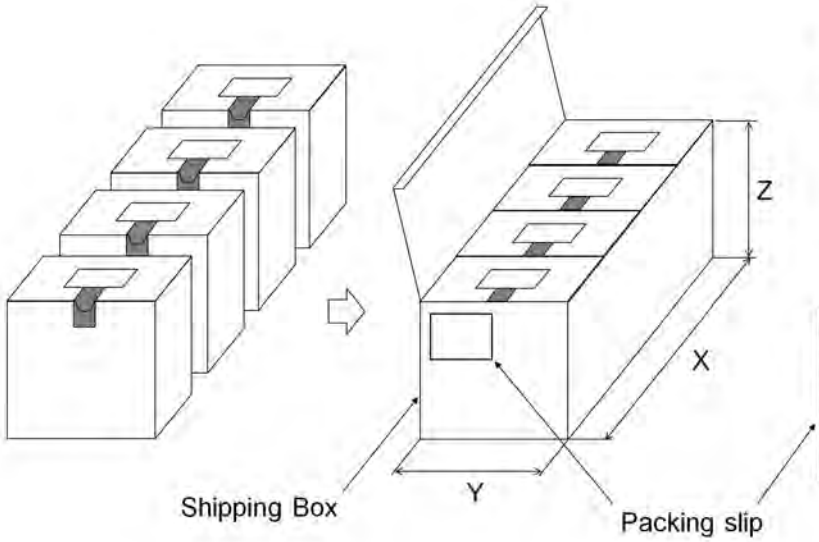

Shipping box

Symbol	Dimension
X	255
Y	190
Z	193

(mm)

3.10 Label Specification

Label Example

© 2019 ROHM Co., Ltd. All rights reserved

4. Footprint dimensions

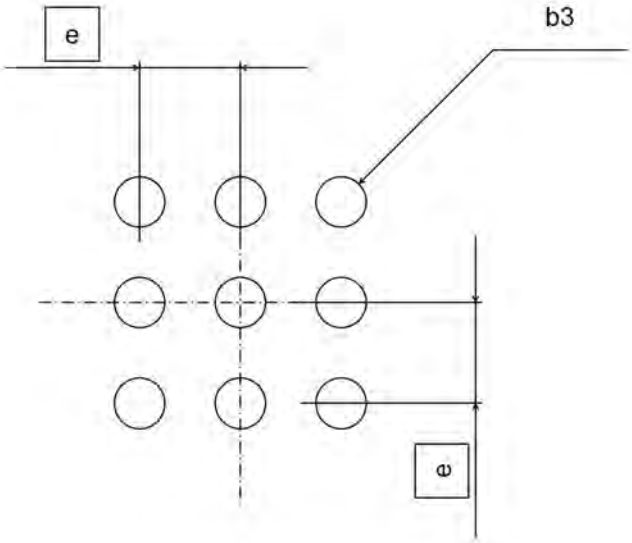

Symbol	Reference Value
e	0.50
b3	0.25

(mm)

In actual design, please optimize in accordance with the situation of your board design and soldering condition.

© 2019 ROHM Co., Ltd. All rights reserved

5. Marking Specification

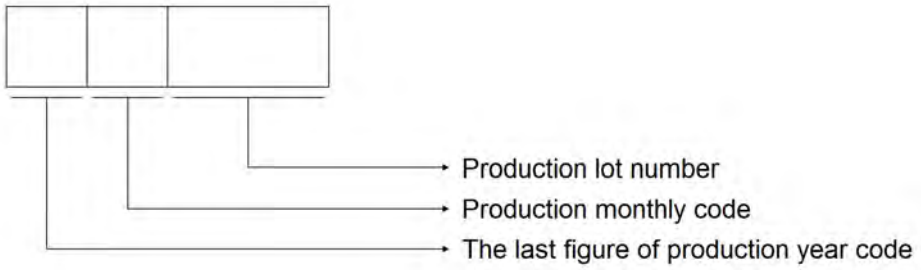

6. Storage conditions

6.1. Storage environment

Recommended storage conditions

	Min.	Max.	Unit
Temperature	5	30	°C
Humidity	-	85	% RH

6.2. Storage period (Start to count since delivery date)

	Min.	Max.	Unit
Storage period	-	1	year

6.3. Specified storage period until soldering

This package dose not require additional drying treatment as long as the moisture condition at the mounting process is within our recommended mounting condition.

© 2019 ROHM Co., Ltd. All rights reserved

7. Soldering conditions

7.1. Recommended temperature profile for reflow

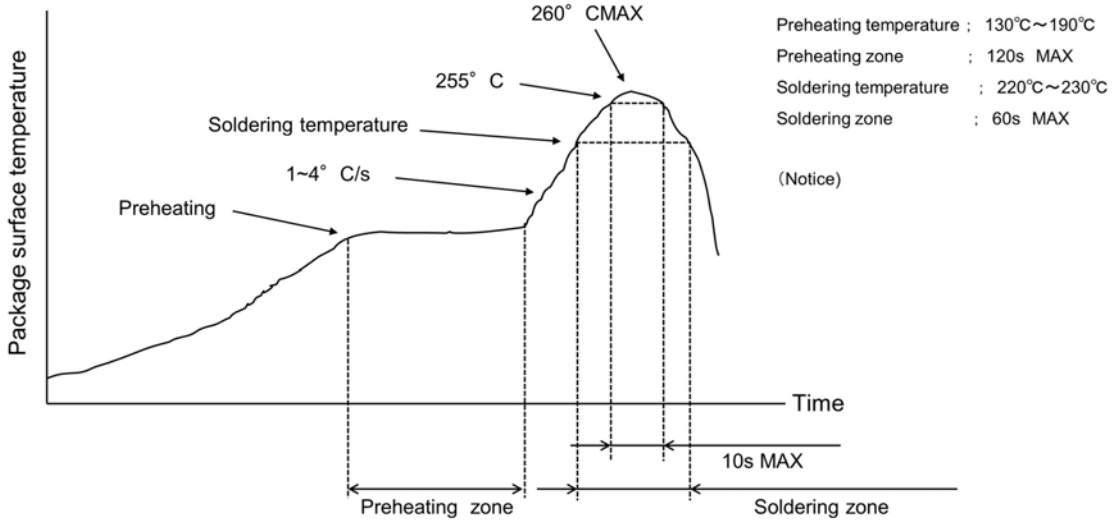

7.2. About mounting with Sn-Pb solder paste

Mounting Sn-Pb solder paste is not reccommended because it has a possibility of reducing reliability to connect with Sn-3.0Ag-0.5Cu solder balls.

7.3. The wave soldering mehod is not supported.

7.4. Partial heat supply method (by soldering iron) is not supported.

© 2019 ROHM Co., Ltd. All rights reserved

8. Precautions

8.1. Caution for handling

Silicon substrate surface is exposing to the side of this package.
Therefore, please pay careful attention to chip and crack, and handle without touching the side of package.

8.2. Regarding the underfill material

In some case, the underfill material is applied in order to reinforce the solder junction of package.
Since there is a case that solder joint reliability may deteriorate according to the resin material or coating condition, please evaluate it sufficiently for its application.
In term of the coating condition, it is preferable that there is an enough material beyond the each four sides of package.

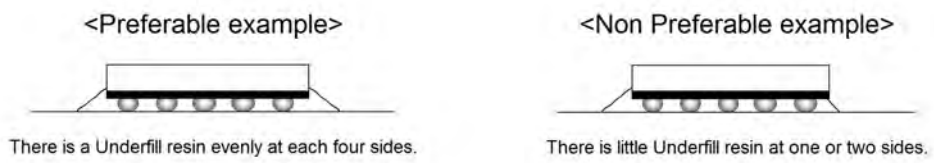

8.3. Mounting on Flexible film

Since film bending stress may occur open failture of solder junction,
usage of support board or under fill is recommended.

8.4. Regarding the jisso form

When it is used under the special conditions such as embedded PCB, please evaluate it sufficiently for its application.

8.5. Regarding the solder terminal

Due to the solder terminal of this package is formed by screen printing method, there may be void observed inside of terminal. Although the void after mounting may not affect solder joint reliability or strength, the size of the void may be increased depending on board and mounting condition, thus ROHM hereby states that the void after mounting will not be guaranteed.

© 2019 ROHM Co., Ltd. All rights reserved

Notes

1) The information contained herein is subject to change without notice.

2) Before you use our Products, please contact our sales representative and verify the latest specifications :

3) Although ROHM is continuously working to improve product reliability and quality, semiconductors can break down and malfunction due to various factors.
Therefore, in order to prevent personal injury or fire arising from failure, please take safety measures such as complying with the derating characteristics, implementing redundant and fire prevention designs, and utilizing backups and fail-safe procedures. ROHM shall have no responsibility for any damages arising out of the use of our Poducts beyond the rating specified by ROHM.

4) Examples of application circuits, circuit constants and any other information contained herein are provided only to illustrate the standard usage and operations of the Products. The peripheral conditions must be taken into account when designing circuits for mass production.

5) The technical information specified herein is intended only to show the typical functions of and examples of application circuits for the Products. ROHM does not grant you, explicitly or implicitly, any license to use or exercise intellectual property or other rights held by ROHM or any other parties. ROHM shall have no responsibility whatsoever for any dispute arising out of the use of such technical information.

6) The Products are intended for use in general electronic equipment (i.e. AV/OA devices, communication, consumer systems, gaming/entertainment sets) as well as the applications indicated in this document.

7) The Products specified in this document are not designed to be radiation tolerant.

8) For use of our Products in applications requiring a high degree of reliability (as exemplified below), please contact and consult with a ROHM representative : transportation equipment (i.e. cars, ships, trains), primary communication equipment, traffic lights, fire/crime prevention, safety equipment, medical systems, servers, solar cells, and power transmission systems.

9) Do not use our Products in applications requiring extremely high reliability, such as aerospace equipment, nuclear power control systems, and submarine repeaters.

10) ROHM shall have no responsibility for any damages or injury arising from non-compliance with the recommended usage conditions and specifications contained herein.

11) ROHM has used reasonable care to ensur the accuracy of the information contained in this document. However, ROHM does not warrants that such information is error-free, and ROHM shall have no responsibility for any damages arising from any inaccuracy or misprint of such information.

12) Please use the Products in accordance with any applicable environmental laws and regulations, such as the RoHS Directive. For more details, including RoHS compatibility, please contact a ROHM sales office. ROHM shall have no responsibility for any damages or losses resulting non-compliance with any applicable laws or regulations.

13) When providing our Products and technologies contained in this document to other countries, you must abide by the procedures and provisions stipulated in all applicable export laws and regulations, including without limitation the US Export Administration Regulations and the Foreign Exchange and Foreign Trade Act.

14) This document, in part or in whole, may not be reprinted or reproduced without prior consent of ROHM.

Thank you for your accessing to ROHM product informations.
More detail product informations and catalogs are available, please contact us.

ROHM Customer Support System

http://www.rohm.com/contact/

© 2015 ROHM Co., Ltd. All rights reserved.