2023 Edition

By Category PDF

Category IC Packages

ICs

IC Packages IC

Includes LAPIS Technology products

ROHM Packages

Small Packages 112
SOP Packages 113
HSOP Packages 113
HTSOP Packages 113
SOP Special Packages 114
Non-lead Packages 115
Optical Non-lead Packages 116
MMP Packages 116
SON Packages 117
SON Special Packages 117
QFP Packages 117
QFN Packages 118
BGA Packages 119
Special Packages 119
WL-CSP Packages 120
Power Packages 121

LAPIS Technology Packages

Part No. Explanation 124
SOP Packages 124
QFP Packages 125
QFN Packages 126
WSON Packages 128
BGA Packages 128
WL-CSP Packages 129

ROHM Packages

Small Packages P.112
SOP Packages P.113
HSOP Packages P.113
HTSOP Packages P.113
SOP Special Packages P.114
Non-lead Packages P.115
Optical Non-lead Packages P.116
MMP Packages P.116
SON Packages P.117
SON Special Packages P.117
QFP Packages P.117
QFN Packages P.118
BGA Packages P.119
Special Packages P.119
WL-CSP Packages P.120
Power Packages P.121

Small Packages

(Unit: mm)

SOP Packages

SSOP3

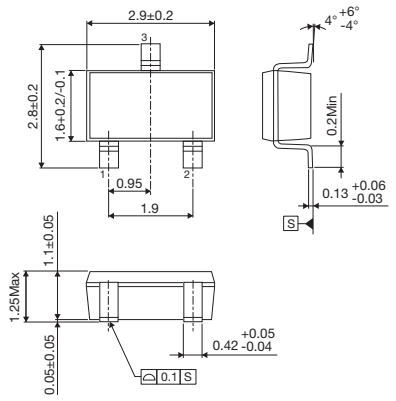

Taping: 3,000pcs

SOP4

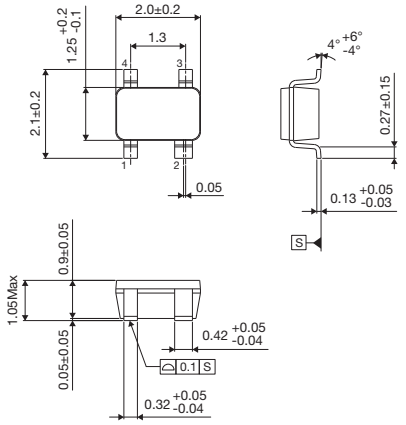

Taping: 3,000pcs

SSOP5

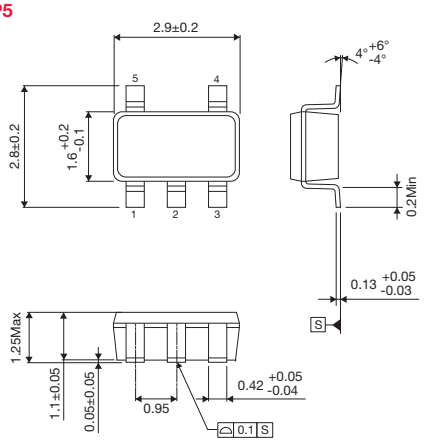

Taping: 3,000pcs

SSOP6

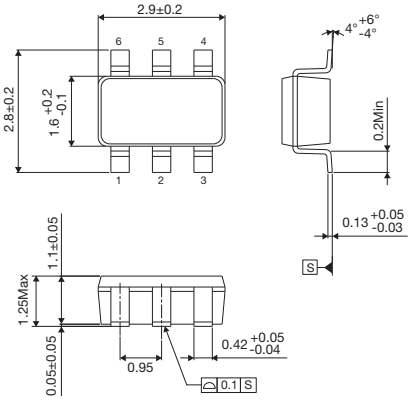

Taping: 3,000pcs

MSOP Packages

MSOP8

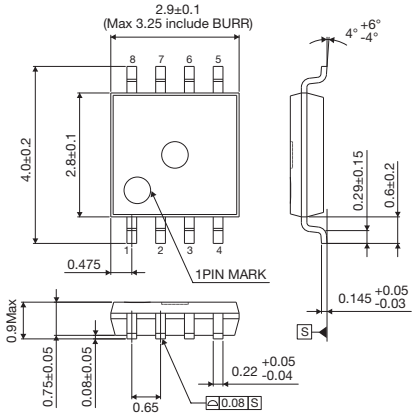

Taping: 3,000pcs

MSOP10

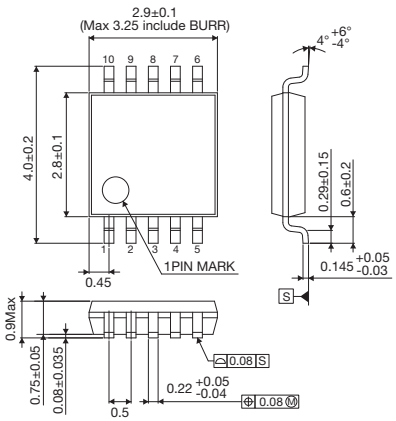

Taping: 3,000pcs

Note: Please refer package from "LAPIS Technology Packages".

SOP Packages

(Unit: mm)

SSOP Package (for SSOP-B14)

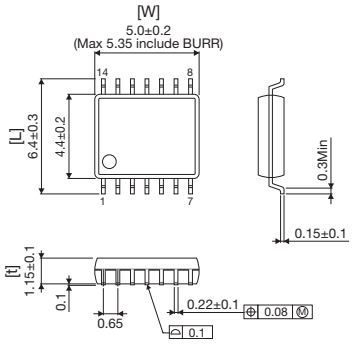

	Package	Pin Number (pin)	Length [L] (mm)	Width [W] (mm)	Thickness [t] (mm)	Package (pcs) taping
SOP Package Pin Pitch: 1.27mm	**SOP8**	8	6.2	5.0	1.61	2,500
	SOP-JW8		6.0	4.9	1.65	2,500
	SOP14	14	6.2	8.7	1.61	2,500
	SOP-J14		6.0	8.65	1.65	2,500
	SOP16	16	6.2	10.0	1.61	2,500
	SOP-J16A		6.0	9.9	1.55	2,500
	SOP18	18	7.8	11.2	1.91	2,000
	SOP20A	20	10.3	12.8	2.5	1,500
	SOP24	24	7.8	15.0	1.91	2,000
	SOP28	28	9.9	18.5	2.31	1,500
	SOP-J8	8	6.0	4.9	1.55	2,500
SSOP-A Package Pin Pitch: 0.8mm	**SSOP-A16**	16	6.2	6.6	1.61	2,500
	SSOP-A20	20	7.8	8.7	1.91	2,000
	SSOP-A24	24	7.8	10.0	1.9	2,000
	SSOP-A32	32	7.8	13.6	1.91	2,000
SSOP-B Package Pin Pitch: 0.65mm	**SSOP-B8**	8	6.4	3.0	1.25	2,500
	SSOP-B10W	10	10.2	3.5	1.9	1,500
	SSOP-B14	14	6.4	5.0	1.25	2,500
	SSOP-B16	16	6.4	5.0		2,500
	SSOP-B20	20	6.4	6.5		2,500
	SSOP-B20W		8.1	6.5	1.81	2,000
	SSOP-B24	24	7.6	7.8	1.25	2,000
	SSOP-B28	28	7.6	10.0		2,000
	SSOP-B28W		10.4	9.2	2.4	1,500
	SSOP-B40	40	7.8	13.6	1.9	2,000
TSSOP-B Package Pin Pitch: 0.65mm	**TSSOP-B8**	8	6.4	3.0	1.2	3,000
	TSSOP-B8J		4.9	3.0	1.1	2,500
	TSSOP-B14J	14	6.4	5.0	1.2	2,500
TSSOP-C Package Pin Pitch: 0.5mm	**TSSOP-C48V**	48	8.1	12.5	1.0	2,000

Note: Please check the ROHM website for detailed dimensions.

HSOP Packages (Heat sink on both side)

(Unit: mm)

HSOP Package (for HSOP-M28)

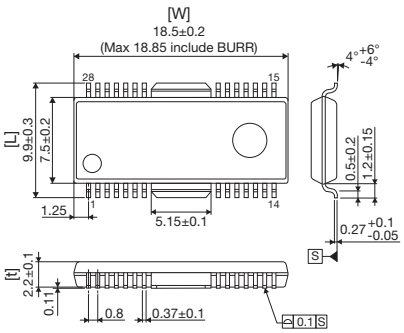

	Package	Pin Number (pin)	Length [L] (mm)	Width [W] (mm)	Thickness [t] (mm)	Package (pcs) taping
HSOP Package Pin Pitch: 1.27mm	**HSOP20**	20	7.8	14.9	2.1	2,000
HSOP Package Pin Pitch: 0.8mm	**HSOP25**	25	7.8	13.6	2.01	2,000
HSOP-M Package Pin Pitch: 0.8mm	**HSOP-M28**	28	9.9	18.5	2.31	1,500
	HSOP-M36	36	9.9	18.5	2.4	1,500

Note: Please check the ROHM website for detailed dimensions.

HTSOP Packages (With back heat sink)

(Unit: mm)

HTSSOP Package (for HTSSOP-B24)

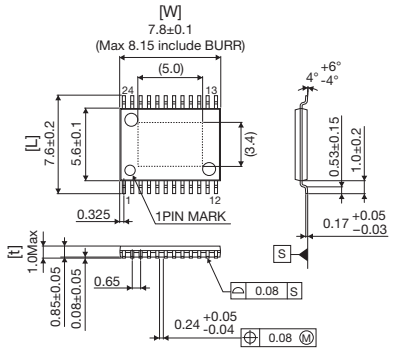

	Package	Pin Number (pin)	Length [L] (mm)	Width [W] (mm)	Thickness [t] (mm)	back heat sink (mm)	Package (pcs) taping
HTSOP Package Pin Pitch: 1.27mm	**HTSOP-J8**	8	6.0	4.9	1.0	2.4×3.2	2,500
	HTSOP-J8ES	8	6.0	4.9		1.8×2.2	2,500
HTSSOP-A Package Pin Pitch: 0.8mm	**HTSSOP-A44**	44	9.5	18.5	1.0	5.0×6.0	1,500
	HTSSOP-A44R		9.5	18.5		5.0×6.0 (surface)	1,500
HTSSOP-B Package Pin Pitch: 0.65mm	**HTSSOP-B16**	16	6.4	5.0	1.0	2.4×3.0	2,500
	HTSSOP-B20	20	6.4	6.5		2.4×4.0	2,500
	HTSSOP-B24	24	7.6	7.8		3.4×5.0	2,000
	HTSSOP-B28	28	6.4	9.7		2.9×5.5	2,500
	HTSSOP-B30	30	7.6	10.0		3.7×5.8	2,000
	HTSSOP-B40	40	7.8	13.6		3.4×8.4	2,000
	HTSSOP-B54	54	9.5	18.5		5.0×6.0	1,500
HTSSOP-C Package Pin Pitch: 0.5mm	**HTSSOP-C48**	48	8.1	12.5	1.0	4.2×5.0	2,000
	HTSSOP-C48R	48	8.1	12.5		4.2×5.0 (surface)	2,000
	HTSSOP-C64	64	8.1	17.2	1.1	3.05×4.45	2,000
HSSOP-C Package Pin Pitch: 0.5mm	**HSSOP-C16**	16	6.0	4.9	1.7	about 2.5×4.12	2,500

Note: Please check the ROHM website for detailed dimensions.

Note: Please refer package from "LAPIS Technology Packages".

SOP Special Packages

(Unit: mm)

SOP-J7S

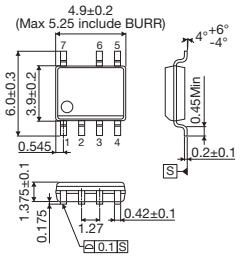

Taping: 2,500pcs

SOP-J11

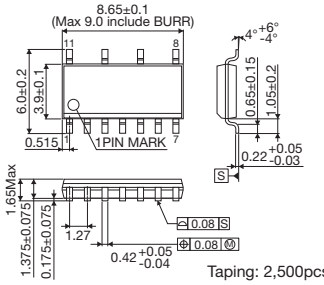

Taping: 2,500pcs

SSOP-A54_23

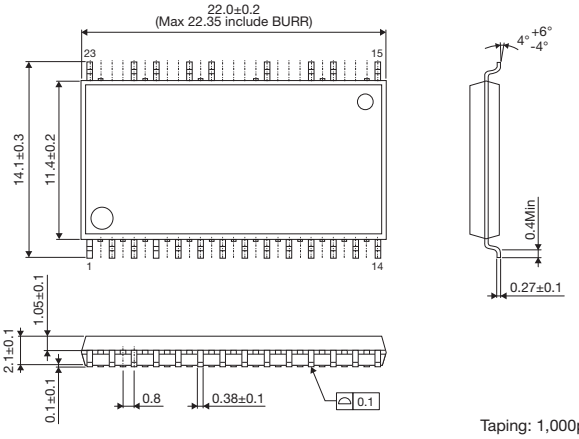

Taping: 1,000pcs

SSOP-A54_36

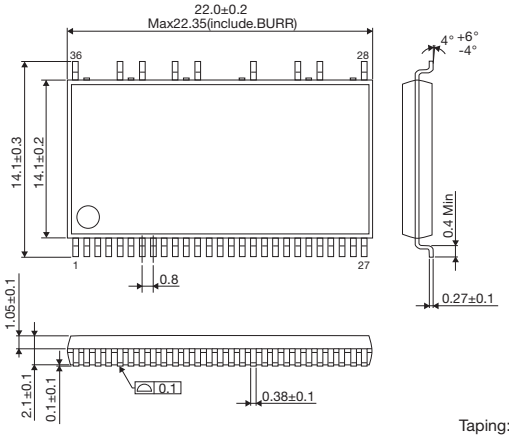

Taping: 1,000pcs

SSOP-A54_36A

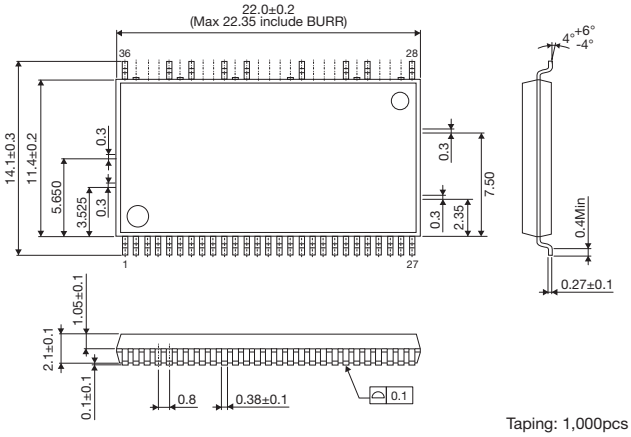

Taping: 1,000pcs

IC Packages

Note: Please refer package from "LAPIS Technology Packages".

Non-lead Packages

(Unit: mm)

VSOF Packages

VSOF5

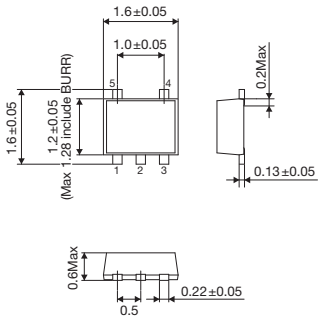

Taping: 3,000pcs

HVSOF5 (With back heat sink)

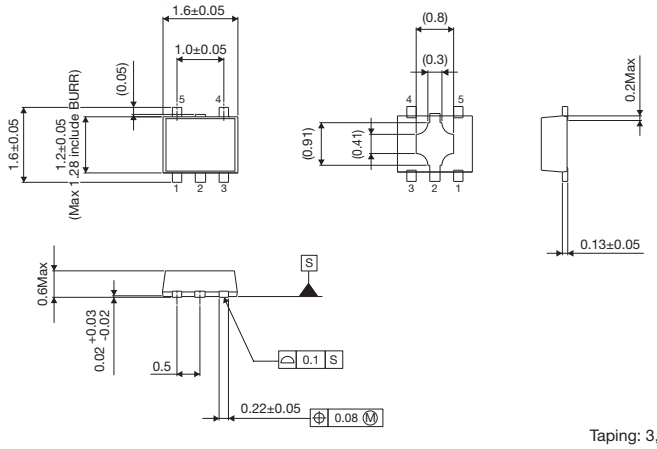

Taping: 3,000pcs

HVSOF6 (With back heat sink)

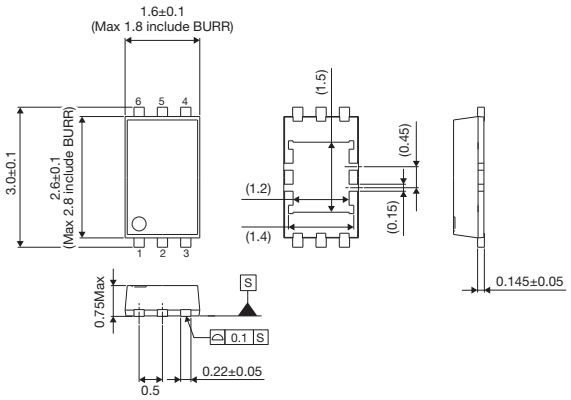

Taping: 3,000pcs

HSON Package (With back heat sink)

HSON8

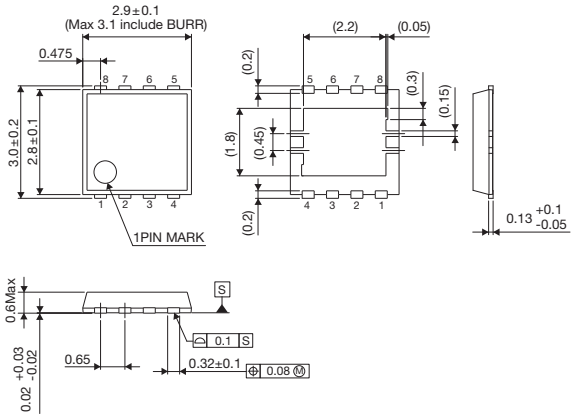

Taping: 3,000pcs

Note: Please refer package from "LAPIS Technology Packages".

Optical Non-lead Packages (With back heat sink)

(Unit: mm)

WSOF Packages

WSOF5

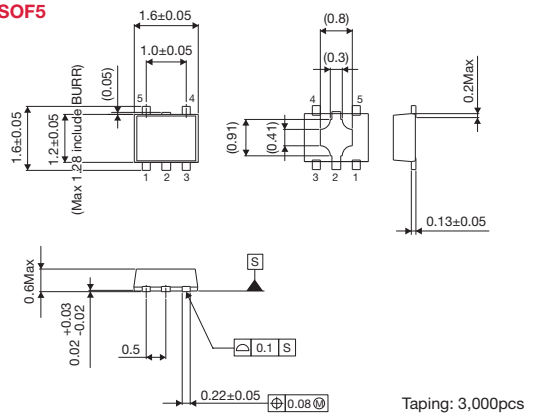

Taping: 3,000pcs

WSOF6

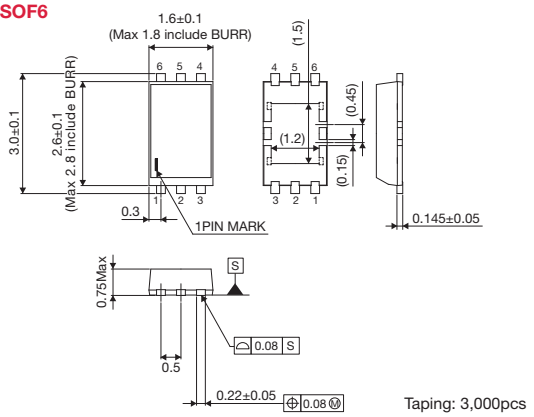

Taping: 3,000pcs

WSON Package

WSON008X2120

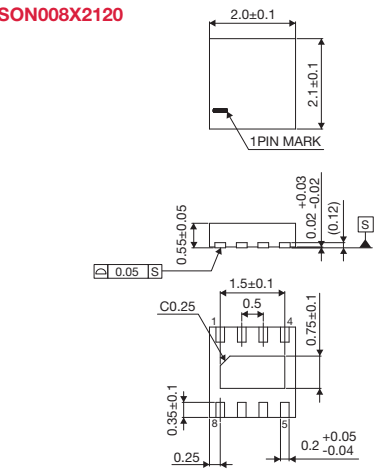

Taping: 4,000pcs

MMP Packages

(Unit: mm)

VMMP Packages

VMMP08LZ2020

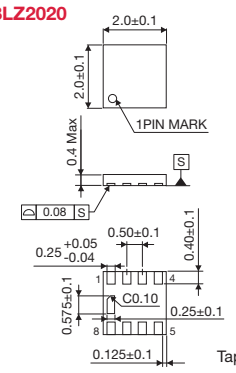

Taping: 4,000pcs

VMMP16LZ3030

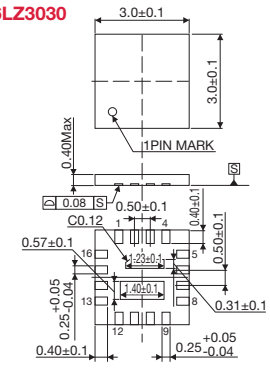

Taping: 2,500pcs

UMMP Packages

UMMP008Z2020

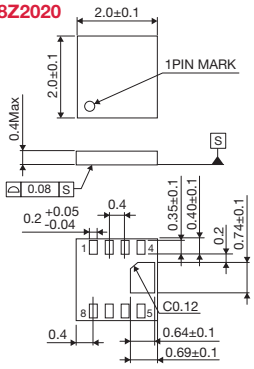

Taping: 4,000pcs

UMMP008AZ020

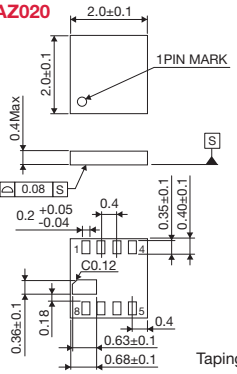

Taping: 4,000pcs

UMMP10LZ1824

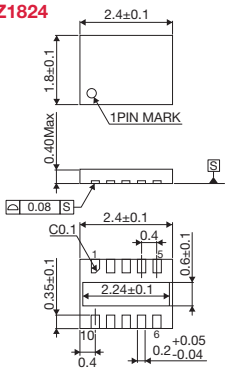

Taping: 2,500pcs

Note: Please refer package from "LAPIS Technology Packages".

SON Packages (With back heat sink)

(Unit: mm)

SON Package (for SON008V5060)

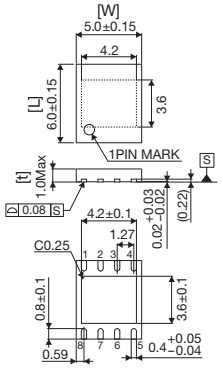

	Package	Pin Number (pin)	Length [L] (mm)	Width [W] (mm)	Thickness [t] (mm)	back heat sink (mm)	Package (pcs) taping
SON Package Pin Pitch: 1.27mm	**SON008V5060**	8	6.0	5.0	1.0	3.6×4.2	2,000
SSON Package Pin Pitch: 0.65mm	**SSON004X1010**	4	1.0	1.0	0.6	0.48×0.48	5,000
	SSON004X1216		1.6	1.2		0.8×0.75	5,000
USON Package Pin Pitch: 0.4mm	**USON014X3020**	14	2.0	3.0	0.6	0.8×2.5	4,000
	USON016X3315	16	1.5	3.3		0.6×2.9	4,000
VSON Package Pin Pitch: 0.5mm	**VSON008V2030**	8	3.0	2.0	1.0	1.4×1.5	3,000
	VSON008X2020		2.0	2.0	0.6	0.8×1.5	4,000
	VSON008X2030		3.0	2.0		1.4×1.5	4,000
	VSON010V3030	10	3.0	3.0	1.0	1.2×2.0	3,000
	VSON010X3020		2.0	3.0	0.6	0.64×2.0	4,000
	VSON010X3030		3.0	3.0		1.2×2.0	4,000
	VSON10FV3030		3.0	3.0	1.0	1.2×2.0	3,000

Note: Please check the ROHM website for detailed dimensions.

SON Special Packages (With back heat sink)

(Unit: mm)

SSON004R1010

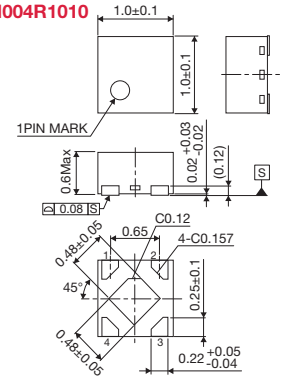

Taping: 5,000pcs

VSON04Z1114A

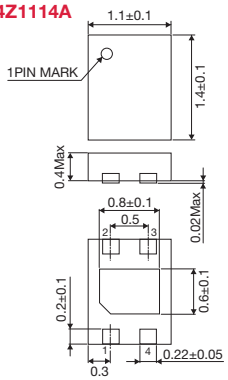

Taping: 5,000pcs

QFP Packages

(Unit: mm)

SQFP Package (for SQFP-T52)

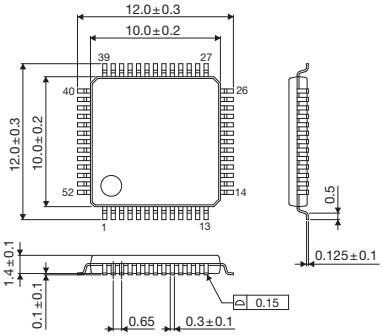

	Package	Pin Number (pin)	Length [L] (mm)	Width [W] (mm)	Thickness [t] (mm)	Package (pcs) Tray	Package (pcs) Taping
SQFP-T Package Pin Pitch: 0.65mm	**SQFP-T52**	52	12.0	12.0	1.5	1,000	1,000
	SQFP-T64	64	14.0	14.0		1,000	–
	SQFP-T80C	80	16.0	16.0		500	–
TQFP Package Pin Pitch: 0.5mm	**TQFP48V**	48	9.0	9.0	1.2	1,000	1,500
	TQFP64V	64	12.0	12.0	1.1	1,000	1,000
	TQFP100V	100	16.0	16.0	1.2	500	500
VQFP Package Pin Pitch: 0.5mm	**VQFP48C**	48	9.0	9.0	1.6	1,000	1,500
	VQFP64	64	12.0	12.0		1,000	1,000
	VQFP80	80	14.0	14.0		1,000	1,000
	VQFP100	100	16.0	16.0		500	500

Note: Please check the ROHM website for detailed dimensions.

QFP Packages (With back heat sink)

(Unit: mm)

HTQFP Package (for HTQFP64AV)

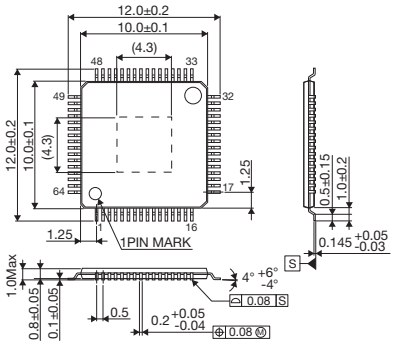

	Package	Pin Number (pin)	Length [L] (mm)	Width [W] (mm)	Thickness [t] (mm)	back heat sink (mm)	Package (pcs) Tray	Package (pcs) Taping
HTQFP Package Pin Pitch: 0.5mm	**HTQFP48V**	48	9.0	9.0	1.0	4.4×4.4	–	1,500
	HTQFP64AV	64	12.0	12.0		4.3×4.3	–	1,000
	HTQFP64BV		12.0	12.0		6.5×6.5	–	1,000
HTQFP Package Pin Pitch: 0.4mm	**HTQFP128UA**	128	16.0	16.0	1.2	6.6×6.6	–	900
HQFP Package Pin Pitch: 0.5mm	**HQFP144VM**	144	22.0	22.0	1.6	6.0×6.0	–	60

Note: Please check the ROHM website for detailed dimensions.

Note: Please refer package from "LAPIS Technology Packages".

QFN Packages (With back heat sink)

(Unit: mm)

UQFN Package (for UQFN28V4040A)

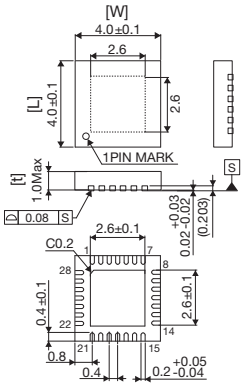

	Package	Pin Number (pin)	Length [L] (mm)	Width [W] (mm)	Thickness [t] (mm)	back heat sink (mm)	Package (pcs) taping
SQFN Package Pin Pitch: 0.65mm	**SQFN016V4040**	16	4.0	4.0	1.0	2.1×2.1	2,500
UQFN Package Pin Pitch: 0.4mm	**UQFN28V4040A**	28	4.0	4.0	1.0	2.6×2.6	2,500
	UQFN036V5050	36	5.0	5.0		2.7×2.7	2,500
	UQFN040V5050	40	5.0	5.0		3.3×3.3	2,500
	UQFN056V7070	56	7.0	7.0		4.7×4.7	1,500
	UQFN56BV7070		7.0	7.0		4.0×4.0	1,500
	UQFN68CV8080	68	8.0	8.0		4.3×4.3	1,000
	UQFN88MV0100	88	10.0	10.0		7.8×7.8	1,000
VQFN Package Pin Pitch: 0.5mm	**VQFN11X3535A**	11	3.5	3.5	0.6	–	2,500
	VQFN016V3030	16	3.0	3.0	1.0	1.4×1.4	3,000
	VQFN16FV3030		3.0	3.0		1.4×1.4	3,000
	VQFN16KV3030		3.0	3.0		1.4×1.4	3,000
	VQFN16Z3030A		3.0	3.0	0.4	1.8×1.8	4,000
	VQFN20	20	4.2	4.2	0.95	–	2,500
	VQFN20FV3535		3.5	3.5	1.0	2.05×2.05	2,500
	VQFN20FV4040		4.0	4.0		2.1×2.1	2,500
	VQFN20PV3535		3.5	3.5		2.05×2.05	2,500
	VQFN20QV3535		3.5	3.5		2.05×2.05	2,500
	VQFN020V4040		4.0	4.0		2.1×2.1	2,500
	VQFN24FV4040	24	4.0	4.0		2.4×2.4	2,500
	VQFN24SV4040		4.0	4.0		2.4×2.4	2,500
	VQFN024V4040		4.0	4.0		2.4×2.4	2,500
	VQFN28FV5050	28	5.0	5.0		2.7×2.7	2,500
	VQFN28SV5050		5.0	5.0		2.7×2.7	2,500
	VQFN028V5050		5.0	5.0		2.7×2.7	2,500
	VQFN32FBV050	32	5.0	5.0		3.4×3.4	2,500
	VQFN32FAV050		5.0	5.0		3.4×3.4	2,500
	VQFN32SV5050		5.0	5.0		3.4×3.4	2,500
	VQFN032V5050		5.0	5.0		3.4×3.4	2,500
	VQFN36	36	6.2	6.2	0.95	–	2,500
	VQFN036V6060		6.0	6.0	1.0	3.6×3.6	2,000
	VQFN40W6060A	40	6.0	6.0	0.8	4.5×4.5	2,000
	VQFN040V6060		6.0	6.0	1.0	3.7×3.7	2,000
	VQFN40FV6060		6.0	6.0		4.4×4.4	2,000
	VQFN48V7070A	48	7.0	7.0	0.9	5.3×5.3	1,500
	VQFN48MCV070		7.0	7.0	1.0	5.6×5.6	1,500
	VQFN48FV7070		7.0	7.0		3.2×3.2	1,500
	VQFN048V7070		7.0	7.0		4.7×4.7	1,500
	VQFN56AV8080	56	8.0	8.0		3.4×3.4	1,000
	VQFN56FV8080		8.0	8.0		5.5×5.5	1,000
WQFN Package Pin Pitch: 0.5mm	**WQFN12X2520A**	12	2.5	2.0	0.5	–	4,000

Note: Please check the ROHM website for detailed dimensions.

Note: Please refer package from "LAPIS Technology Packages".

BGA Packages

(Unit: mm)

VBGA Package (for VBGA049W040A)

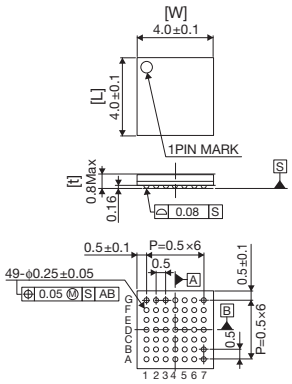

	Package	Pin Number (pin)	Length [L] (mm)	Width [W] (mm)	Thickness [t] (mm)	Package (pcs) taping
SBGA Package Pin Pitch: 0.65mm	**SBGA072T070A**	72	7.0	7.0	1.2	1,500
VBGA Package Pin Pitch: 0.5mm	**VBGA048W040**	48	4.0	4.0	0.9	2,500
	VBGA049W040A	49	4.0	4.0	0.8	2,500
	VBGA064T050A	64	5.0	5.0	1.2	2,500
	VBGA099W060	99	6.0	6.0	0.9	2,000

Note: Please check the ROHM website for detailed dimensions.

Special Packages

(Unit: mm)

CLGA10V020A

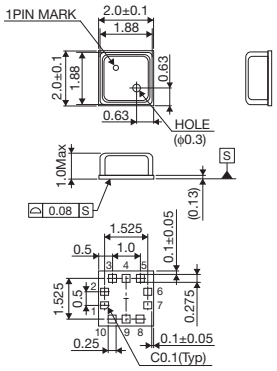

Taping: 3,000pcs

MLGA010V020A

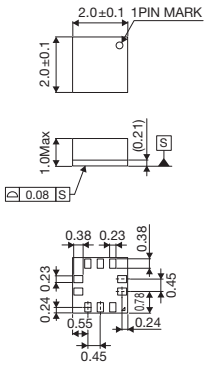

Taping: 2,500pcs

WLGA010V28

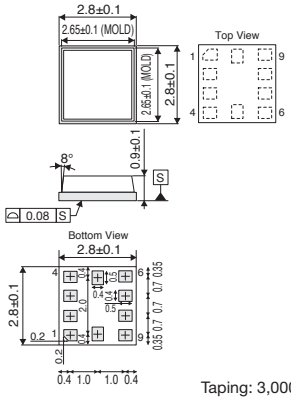

Taping: 3,000pcs

RLGA10V020T/ RLGA10VG020T

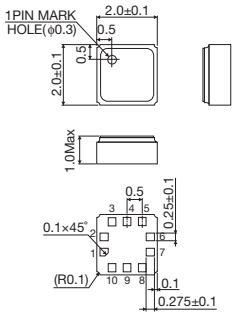

Note: Please refer package from "LAPIS Technology Packages".

WL-CSP Packages

(Unit: mm)

VCSP <Pin Pitch: 0.5mm>

VCSP85H	VCSP60N	VCSP50L	VCSP35L
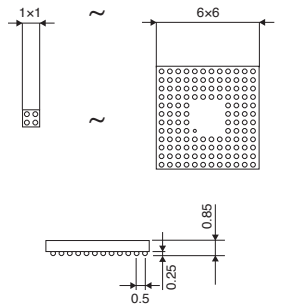	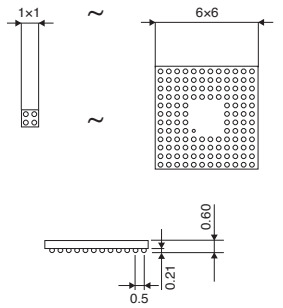	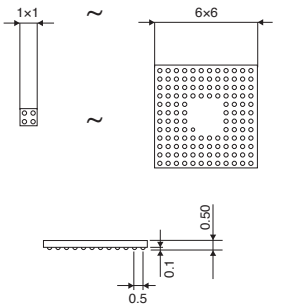	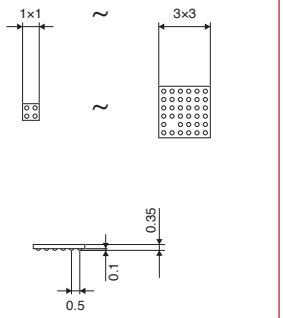
2.8mm square size less than: 3,000pcs 2.81mm square size or more: 2,500pcs	2.8mm square size less than: 3,000pcs 2.81mm square size or more: 2,500pcs	2.8mm square size less than: 3,000pcs 2.81mm square size or more: 2,500pcs	2.8mm square size less than: 3,000pcs 2.81mm square size or more: 2,500pcs Embossed carrier tape: 3,000pcs

UCSP <Pin Pitch: 0.4mm>

UCSP75M	UCSP55M	UCSP50L	UCSP35L
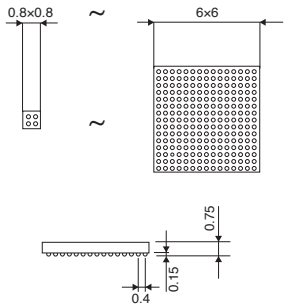	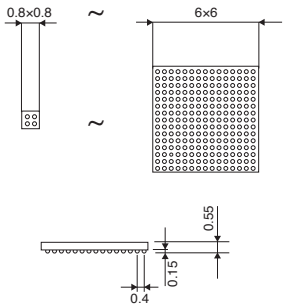	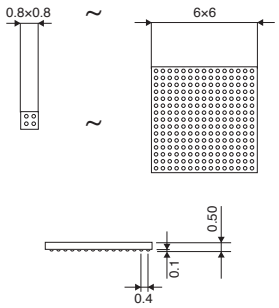	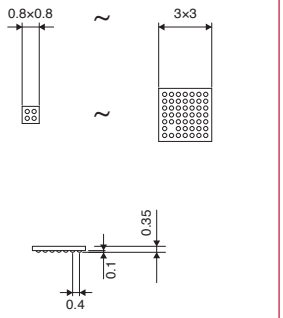
2.8mm square size less than: 3,000pcs 2.81mm square size or more: 2,500pcs	2.8mm square size less than: 3,000pcs 2.81mm square size or more: 2,500pcs	2.8mm square size less than: 3,000pcs 2.81mm square size or more: 2,500pcs	2.8mm square size less than: 3,000pcs 2.81mm square size or more: 2,500pcs Embossed carrier tape: 3,000pcs

UCSP30L	UCSP25L	UCSP16X
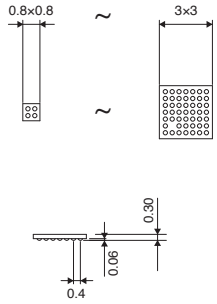	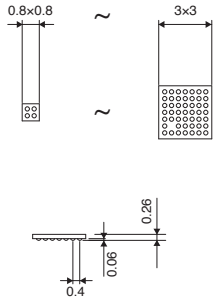	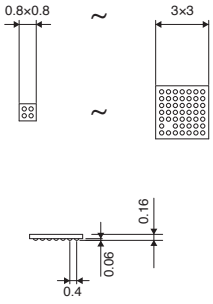
2.8mm square size less than: 3,000pcs 2.81mm square size or more: 2,500pcs Embossed carrier tape: 3,000pcs	Embossed carrier tape: 3,000pcs	Embossed carrier tape: 3,000pcs

Note: Please refer package from "LAPIS Technology Packages".

Power Packages

(Unit: mm)

Power-3pin

TO220CP-3

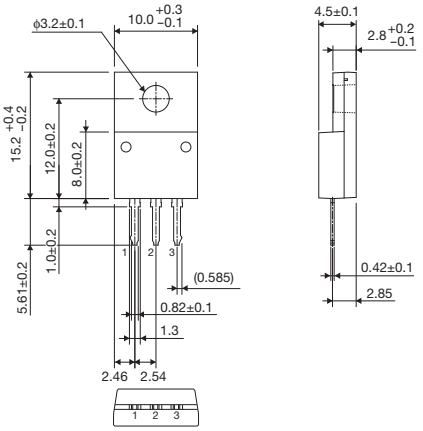

Taping: 500pcs

TO252-3

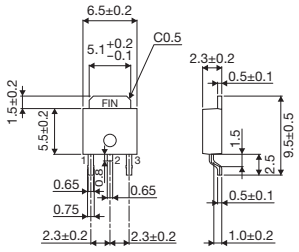

Taping: 2,000pcs

TO252S-3

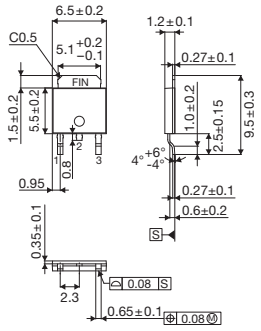

Taping: 2,000pcs

TO220FP-3

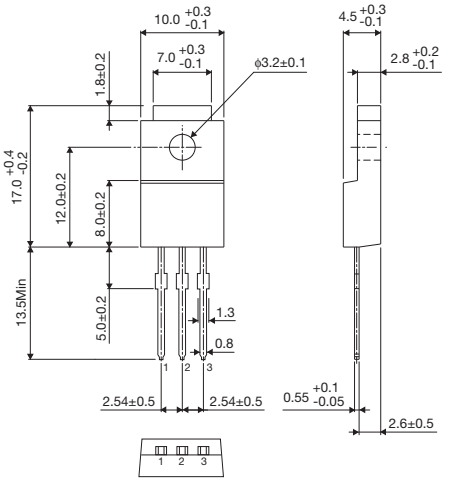

Container tube: 500pcs

TO252-J3

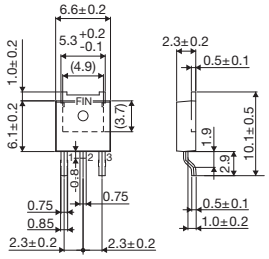

Taping: 2,000pcs

TO263-3

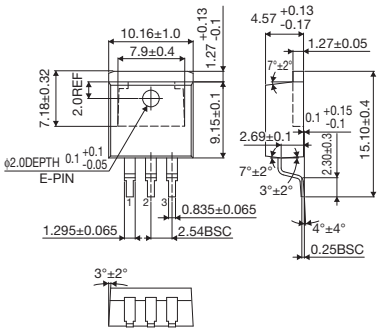

Taping: 500pcs

SOT89-3K

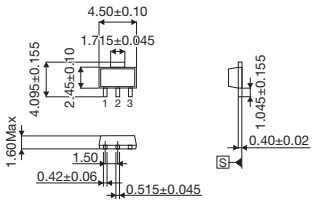

Taping: 1,000pcs

Power-4pin

SOT223-4

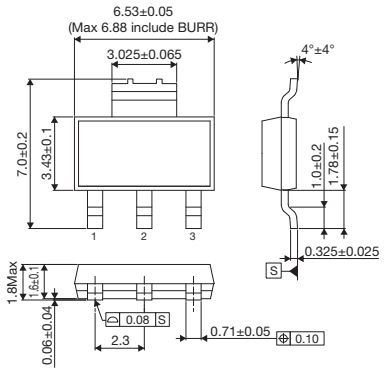

Taping: 2,000pcs

Note: Please refer package from "LAPIS Technology Packages".

Power Packages

(Unit: mm)

Power-5pin

TO220FP-5

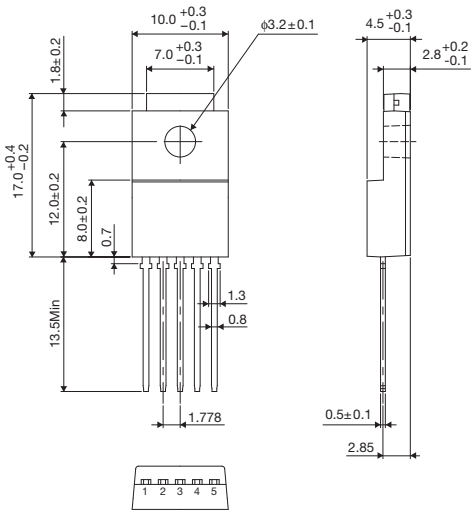

Tube: 500pcs

TO220FP-5 (V5)

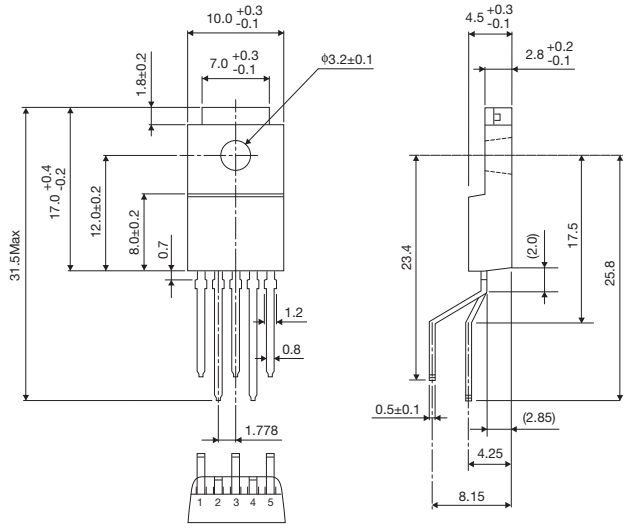

Tube: 500pcs

TO220CP-V5

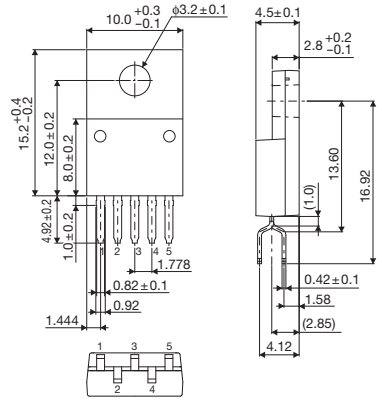

Taping: 500pcs

TO252-5

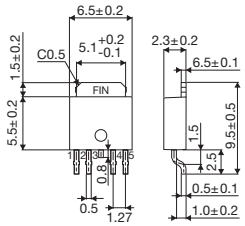

Taping: 2,000pcs

TO252S-5

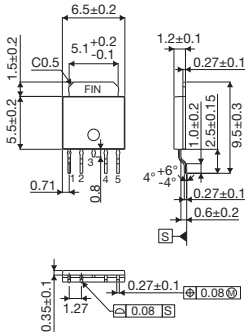

Taping: 2,000pcs

HRP5

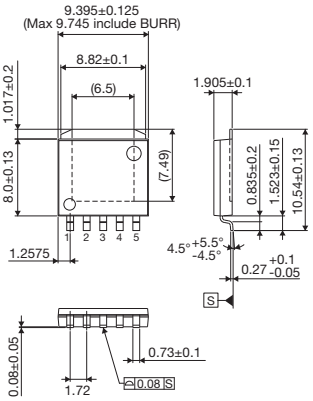

Taping: 2,000pcs

TO263-5

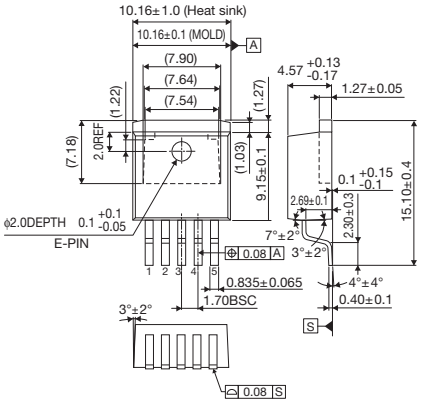

Taping: 500pcs

TO252-J5

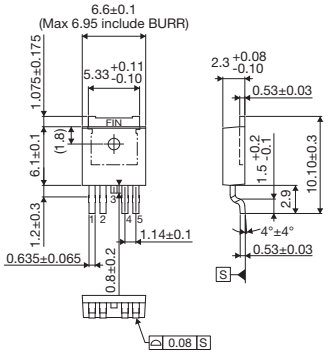

Taping: 2,000pcs

Note: Please refer package from "LAPIS Technology Packages".

Power Packages

(Unit: mm)

Power-6pin

TO220-6M

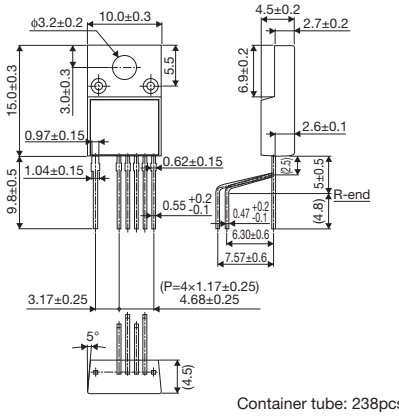

Container tube: 238pcs

Power-7pin

TO220-7M

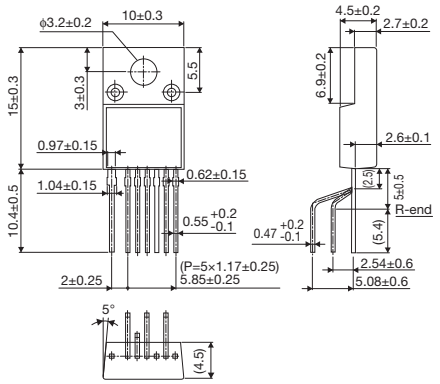

Container tube: 238pcs

HRP7

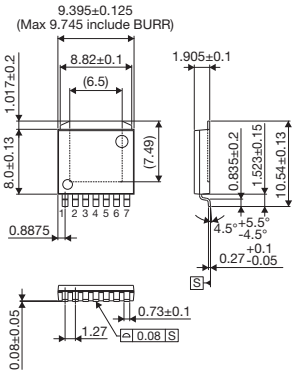

Taping: 2,000pcs

TO263-7

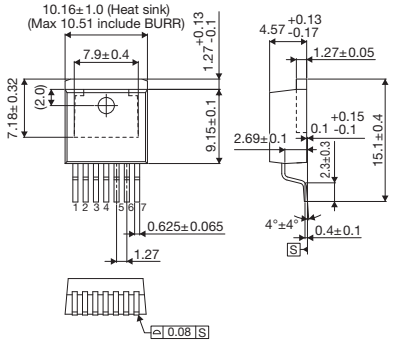

Taping: 2,000pcs

IC Packages

Note: Please refer package from "LAPIS Technology Packages".

LAPIS Technology Packages

Part No. Explanation P.124
SOP Packages P.124
QFP Packages P.125
QFN Packages P.126
WSON Packages P.128
BGA Packages P.128
WL-CSP Packages P.129

These package size are an example. For details, please inquire to the sales.

LAPIS Technology LSI Part No. Explanation

Product names are assigned to our semiconductor devices using the following convention, starting with the character "M".

M □ 0 0 0 0 0 0 0 0 0 □ – 0 0 0 □ □ Z □ □ □

Device Function
The device functions are classified as follows:

MD	DRAM
MR	P2ROM™ , OTPROM
MS	Video Memory
ML	Logic
MK	Module, chip set
MT	Driver

Device Code
The device code expresses a function specific to a device using a combination of numbers and alphanumeric characters.

Character Symbol
The character symbol is added to indicate the modification of an existing product, to emphasize a specification that differs from the standard specification of an existing product, or to indicate a design standard.

Package Symbol
The package symbol expresses the type and lead bending profile of a package in two digits.

Option Classification Symbol
The option classification symbol is used to distinguish between the option code and the package symbol.

Derived Code
The derived code indicates the speed ranking for DRAM products and is used as a derived code for logic products.

Option Code
The option code indicates a symbol that identifies the specification of a product with an option.

The following shows the convention of item name assignment for conventional products.
・The actual package profile is not shown here.

M S M 6 6 5 0 7 J S

Process Classification

A	Analog
C	Bi-CMOS, multi-chip product

Circuit Category

L	Bipolar logic
M	MOS

Package Profile

SOP Packages

(Unit: mm)

SSOP Package

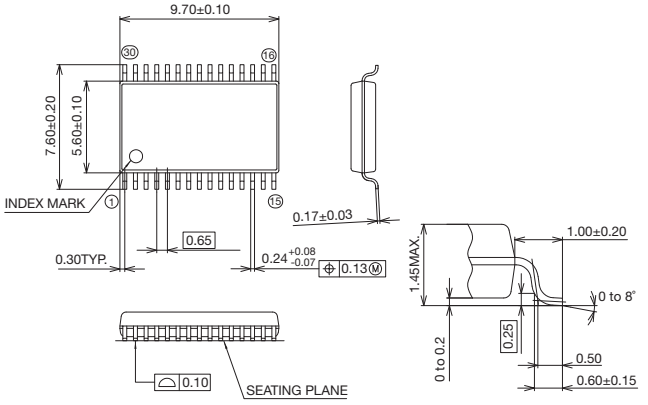

(P-) SSOP30-56-0.65-TK-MC

	Package	Pin Number (pin)	Length [L] (mm)	Width [W] (mm)	Thickness [t] (mm)	TRAY (pcs)	T&R (pcs)
SSOP Package Pin Pitch: 1mm	**SSOP32-430-1.00-XXX**	32	12.0	15.95	2.50	1,280	1,000
SSOP Package Pin Pitch: 0.65mm	**(P-) SSOP16-0225-0.65-XXX**	16	6.4	5.0	1.15	4,760	2,500
	(P-) SSOP30-56-0.65-XXX	30	7.6	9.7	1.45	2,000	2,000
		30	7.6	9.7	1.85	2,000	2,000
TSSOP Package Pin Pitch: 0.65mm	**(P-) TSSOP20-0225-0.65-XXX**	20	6.4	6.5	1.10	4,160	2,000
VSSOP Package Pin Pitch: 0.65mm	**P-VSSOP8-0150-0.65-XXX**	8	4.0	2.9	0.90	–	3,000

Note1: Please check the LAPIS Technology website for detailed dimensions.
Note2: For suffix shown as "-XXX" in every package profile, suitable optional code should be filled in with, for example on the grounds of the difference of production hub and the difference of internal structure, etc. Please inquire to the sales for details.

These package size are an example. For details, please inquire to the sales.

QFP Packages

(Unit: mm)

TQFP Package

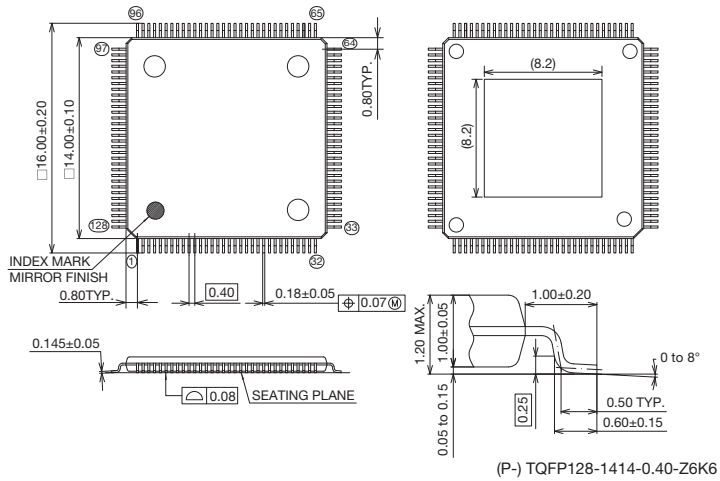

(P-) TQFP128-1414-0.40-Z6K6

QFP

	Package	Pin Number (pin)	Length [L] (mm)	Width [W] (mm)	Thickness [t] (mm)	TRAY (pcs)	T&R (pcs)
QFP Package Pin Pitch: 0.8mm	**QFP44-P-910-0.80-XXX**	44	13.5	14.5	2.25	1,440	1,000
	(P-) QFP64-1414-0.80-XXX	64	17.2	17.2	2.80	840	–
	(P-) QFP80-1420-0.80-XXX	80	19.0	25.0	2.50	600	–
QFP Package Pin Pitch: 0.65mm	**(P-) QFP56-910-0.65-XXX**	56	13.5	14.5	2.25	1,400	1,000
	(P-) QFP80-1414-0.65-XXX	80	17.2	17.2	3.05	840	–
	(P-) QFP100-1420-0.65-XXX	100	19.0	25.0	2.50	600	–

Note1: Please check the LAPIS Technology website for detailed dimensions.
Note2: For suffix shown as "-XXX" in every package profile, suitable optional code should be filled in with, for example on the grounds of the difference of production hub and the difference of internal structure, etc. Please inquire to the sales for details.

LQFP

	Package	Pin Number (pin)	Length [L] (mm)	Width [W] (mm)	Thickness [t] (mm)	TRAY (pcs)	T&R (pcs)
LQFP Package Pin Pitch: 0.8mm	**(P-) LQFP32-0707-0.80-XXX**	80	9.0	9.0	1.600	2,500	1,000
LQFP Package Pin Pitch: 0.50mm	**(P-) LQFP144-2020-0.50-XXX**	50	22.0	22.0	1.600	600	–

Note1: Please check the LAPIS Technology website for detailed dimensions.
Note2: For suffix shown as "-XXX" in every package profile, suitable optional code should be filled in with, for example on the grounds of the difference of production hub and the difference of internal structure, etc. Please inquire to the sales for details.

TQFP

	Package	Pin Number (pin)	Length [L] (mm)	Width [W] (mm)	Thickness [t] (mm)	TRAY (pcs)	T&R (pcs)
TQFP Package Pin Pitch: 0.80mm	**(P-) TQFP32-0707-0.80-XXX**	32	9.0	9.0	1.20	2,500	1,000
	(P-) TQFP44-1010-0.80-XXX	44	12.0	12.0	1.20	1,600	1,000
TQFP Package Pin Pitch: 0.65mm	**(P-) TQFP52-1010-0.65-XXX**	52	12.0	12.0	1.20	1,600	1,000
TQFP Package Pin Pitch: 0.5mm	**(P-) TQFP48-0707-0.50-XXX**	48	9.0	9.0	1.20	2,500	1,000
	(P-) TQFP64-1010-0.50-XXX	64	12.0	12.0	1.20	1,600	1,000

Note1: Please check the LAPIS Technology website for detailed dimensions.
Note2: For suffix shown as "-XXX" in every package profile, suitable optional code should be filled in with, for example on the grounds of the difference of production hub and the difference of internal structure, etc. Please inquire to the sales for details.

These package size are an example. For details, please inquire to the sales.

QFP Packages

(Unit: mm)

TQFP

	Package	Pin Number (pin)	Length [L] (mm)	Width [W] (mm)	Thickness [t] (mm)	TRAY (pcs)	T&R (pcs)
TQFP Package Pin Pitch: 0.5mm	**(P-) TQFP80-1212-0.50-XXX**	80	14.0	14.0	1.20	1,190	–
	(P-) TQFP100-1414-0.50-XXX	100	16.0	16.0	1.20	900	–
TQFP Package Pin Pitch: 0.40mm	**(P-) TQFP80-1010-0.40-XXX**	80	12.0	12.0	1.20	1,600	–
	(P-) TQFP120-1414-0.40-XXX	120	16.0	16.0	1.20	900	–
	(P-) TQFP128-1414-0.40-XXX	128	16.0	16.0	1.20	900	–

Note1: Please check the LAPIS Technology website for detailed dimensions.
Note2: For suffix shown as "-XXX" in every package profile, suitable optional code should be filled in with, for example on the grounds of the difference of production hub and the difference of internal structure, etc. Please inquire to the sales for details.

QFN Packages

(Unit: mm)

VQFN

P-VQFN28-0505-0.50-U66

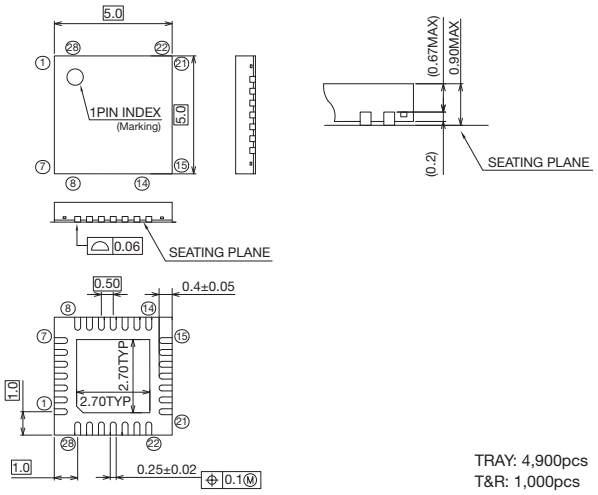

TRAY: 4,900pcs
T&R: 1,000pcs

WQFN

P-WQFN16-0404-0.50-63

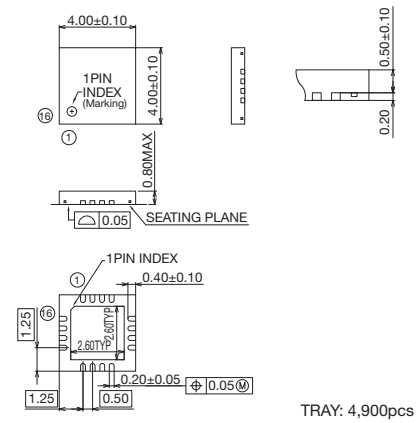

TRAY: 4,900pcs
T&R: 1,000pcs

P-WQFN24-0404-0.50-A63

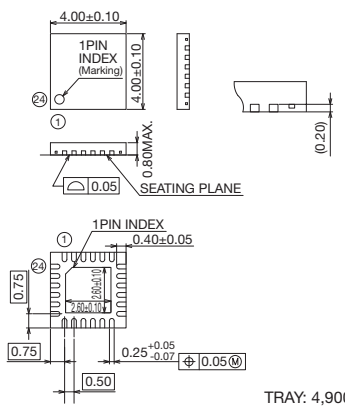

TRAY: 4,900pcs
T&R: 1,000pcs

P-WQFN28-0404-0.40-63

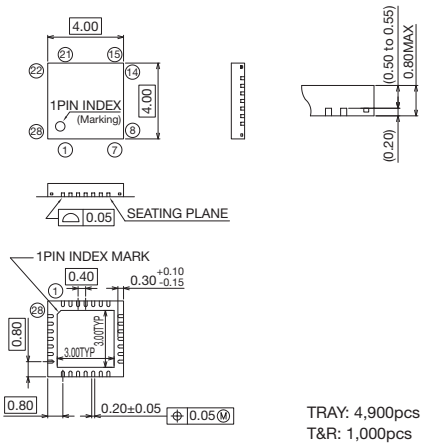

TRAY: 4,900pcs
T&R: 1,000pcs

These package size are an example. For details, please inquire to the sales.

QFN Packages

(Unit: mm)

WQFN

P-WQFN32-0505-0.50-A63

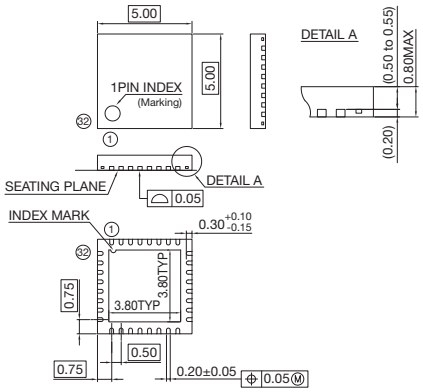

TRAY: 4,030pcs
T&R: 1,000pcs

P-WQFN32-0505-0.50-A63-MC

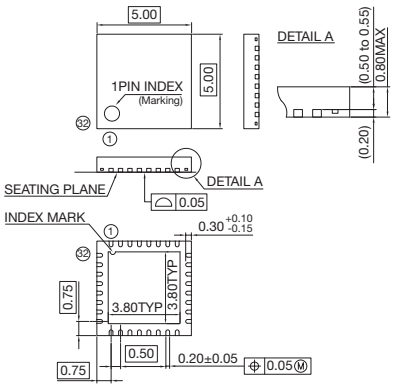

TRAY: 403pcs
T&R: 1,000pcs

P-WQFN32-0505-0.50-W66

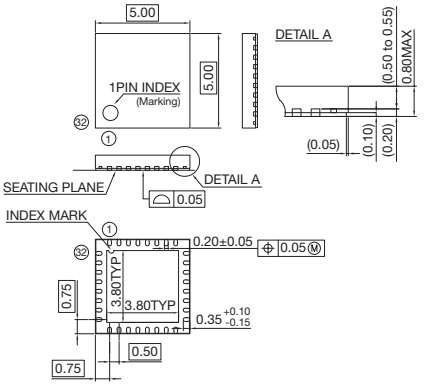

TRAY: 4,030pcs
T&R: 1,000pcs

WQFN36-0606-0.50-A63

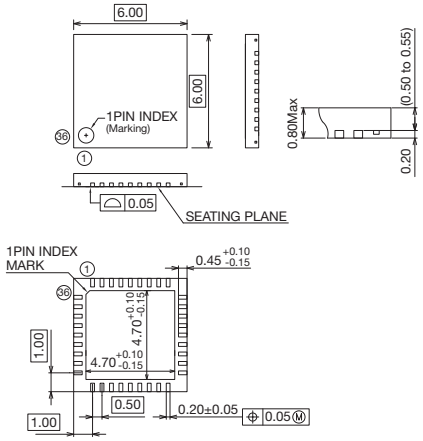

TRAY: 4,900pcs
T&R: 2,000pcs

P-WQFN36-0606-0.50-T63

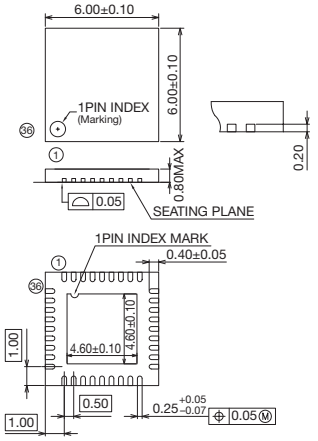

TRAY: 490pcs
T&R: 2,000pcs

P-WQFN40-0606-0.50-63

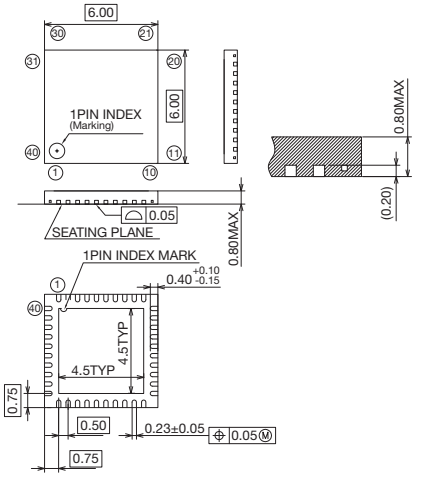

TRAY: 4,900pcs
T&R: 2,500pcs

P-WQFN48-0606-0.40-T63-MC

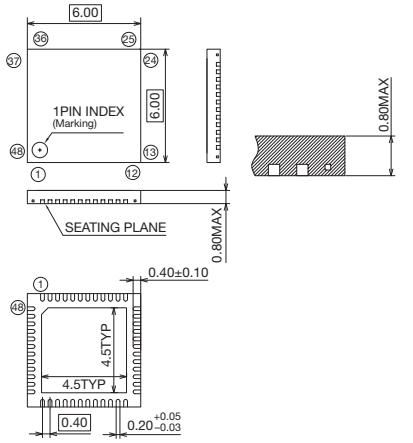

TRAY: —
T&R: 3,000pcs

P-WQFN48-0707-0.50-63

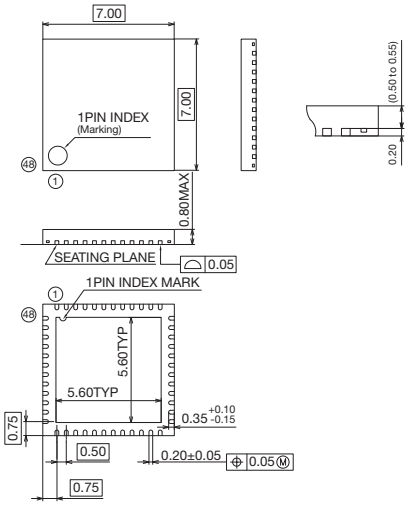

TRAY: 2,500pcs
T&R: 2,000pcs

P-WQFN64-0909-0.50-63

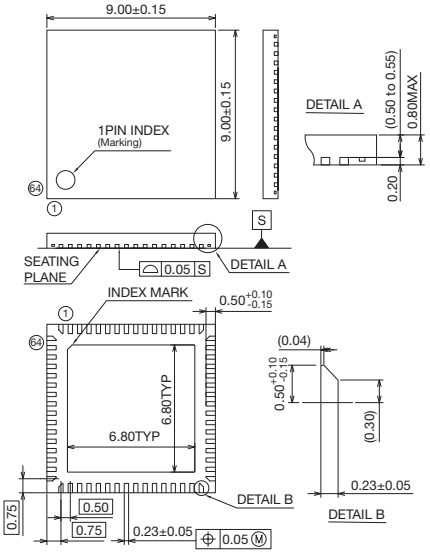

TRAY: 2,600pcs
T&R: 3,000pcs

These package size are an example. For details, please inquire to the sales.

WSON Packages

(Unit: mm)

WSON

P-WSON10-0303-0.50-63

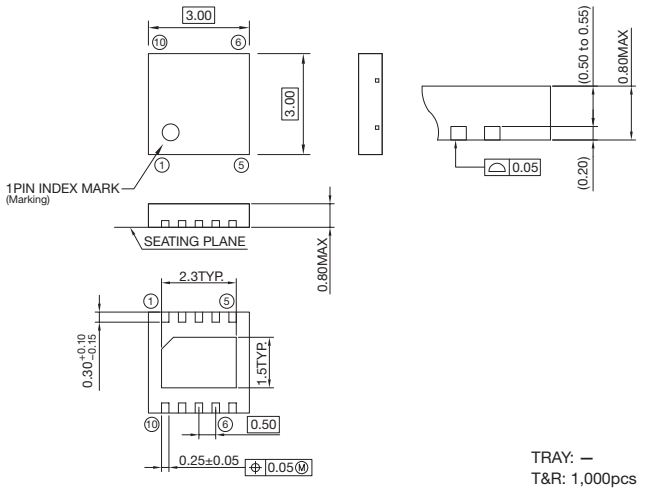

TRAY: —
T&R: 1,000pcs

BGA Packages

(Unit: mm)

TFBGA

P-TFBGA36-0505-0.80-9

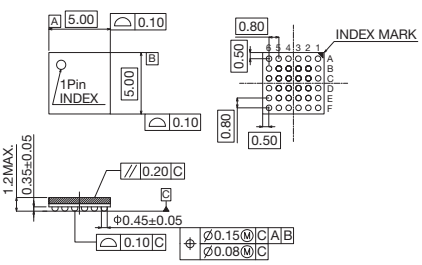

TRAY: 3,770pcs
T&R: —

P-TFBGA54-0808-0.80-9

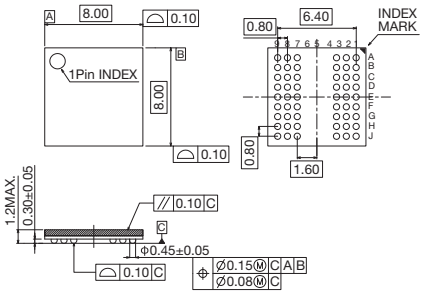

TRAY: 3,480pcs
T&R: 2,000pcs

P-TFBGA81-6.5×6.5-0.65-9-MC

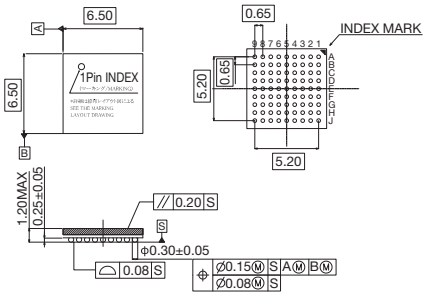

TRAY: —
T&R: 2,000pcs

P-TFBGA144-1111-0.80-1

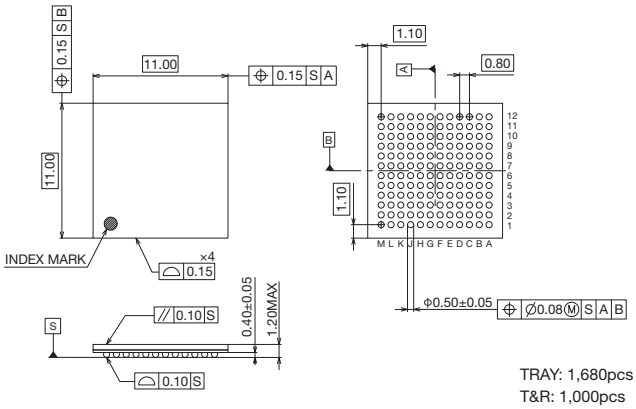

TRAY: 1,680pcs
T&R: 1,000pcs

P-LBGA81-1010-1.00-1-MC

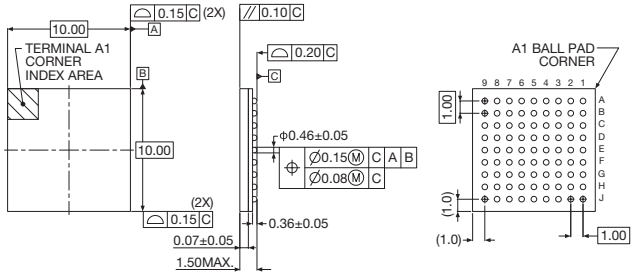

TRAY: 1,680pcs
T&R: —

These package size are an example. For details, please inquire to the sales.

WL-CSP Packages

(Unit: mm)

WCSP

S-UFLGA20-1.84×2.14-0.40-W

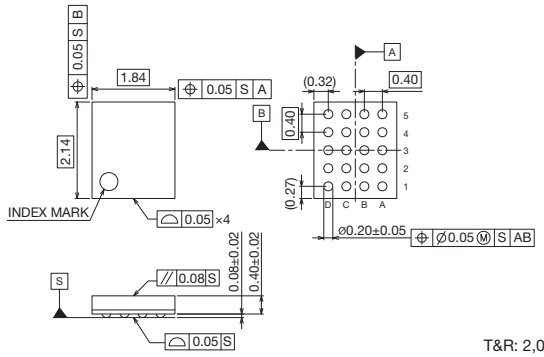

T&R: 2,000pcs

S-UFLGA30-2.28×2.56-0.40-W

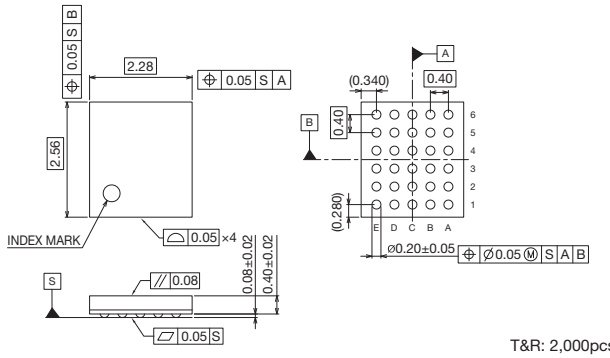

T&R: 2,000pcs

S-UFLGA30-2.28×2.61-0.40-W

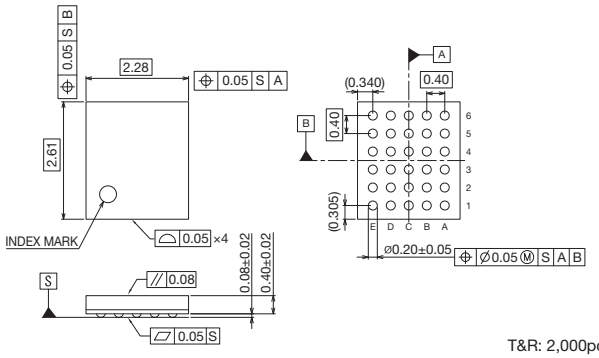

T&R: 2,000pcs

S-UFLGA34-2.59×2.59-0.40-W

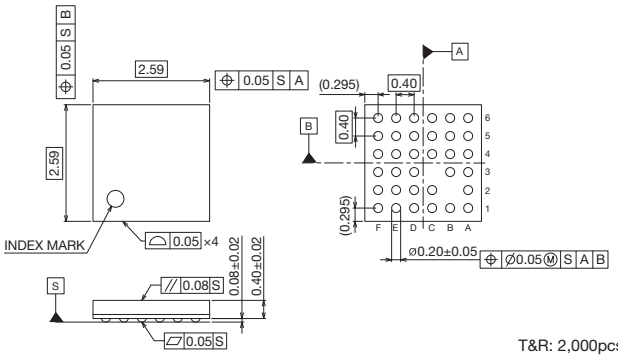

T&R: 2,000pcs

S-UFLGA48-3.06×2.96-0.40-W

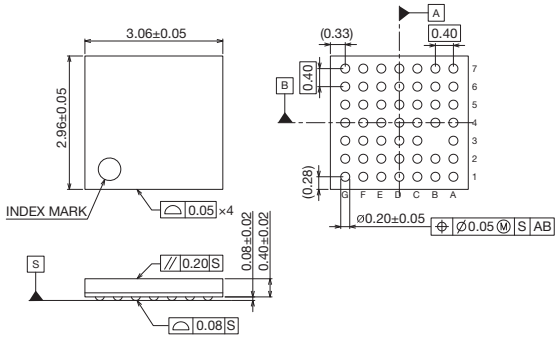

T&R: 2,000pcs

S-VFBGA25-2.76×2.50-0.50-W

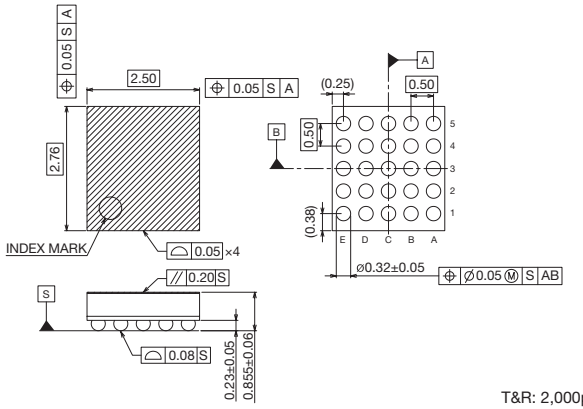

T&R: 2,000pcs