Primary Buck DC/DC Converter Series

Single 2.2 MHz Buck DC/DC Converter For Automotive BD9P2x5EFV-C series Evaluation Board

BD9P2x5EFV-TSB-001 (3.5 V to 40 V Input, 2 A)

Introduction

This user's guide will provide the necessary steps to operate the Evaluation Board of ROHM's BD9P2x5EFV-C Buck DC/DC converter. This includes the external parts, operating procedures and application data.

BD9P205EFV-TSB-001 VOUT=5.0V setting

BD9P235EFV-TSB-001 VOUT=3.3V fixed

BD9P255EFV-TSB-001 VOUT=5.0V fixed

Description

This Evaluation Board was developed for ROHM's single 2.2MHz buck DC/DC converter BD9P2x5EFV-C. BD9P2x5EFV-C Series are current mode synchronous buck DC/DC converter integrating POWER MOSFETs. The BD9P2x5EFV-C series accepts a power supply input range of 3.5V to 40V and generates a maximum output current of 2A. BD9P205EFV-C generates an output voltage range of 0.8V to 8.5V using external resistors, BD9P235EFV-C generates a fixed output voltage of 3.3V, and BD9P255EFV-C generates a fixed output voltage of 5.0V.

Application

Automotive Powered Supplies

Consumer Powered Supplies

Recommended Operating Conditions

Table 1. Recommended Operating Conditions

Parameter	Min	Typ	Max	Units	Conditions
Input Voltage	3.5	-	40	V	Initial startup is 4.0V or more
Output Voltage for BD9P205EFV-C (Note1)	0.8	-	8.5	V	
Output Voltage for BD9P235EFV-C	-	3.3	-	V	
Output Voltage for BD9P255EFV-C	-	5.5	-	V	
Output Current Range	-	-	2.0	A	OCP_SEL=H: 1.5A (Max) OCP_SEL=L: 2.0A (Max)
Switching Frequency	-	2.2	-	MHz	
Maximum Efficiency(BD9P235EFV-C)	-	86.0	-	%	VIN=12V, Io=0.5A, Ta=25°C
Maximum Efficiency(BD9P255EFV-C)		91.6		%	VIN=12V, Io=0.5A, Ta=25°C

(Note 1) Although the minimum output voltage is configurable up to 0.8 V, it may be limited by the SW min ON pulse width. For the same reason, although the maximum output voltage is configurable up to 8.5 V, it may be limited by the SW minimum OFF pulse width.

© 2020 ROHM Co., Ltd.

Evaluation Board

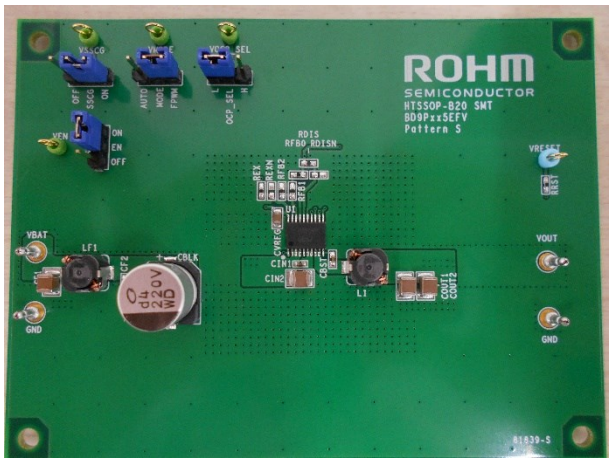

Figure 1. BD9P2x5EFV-C (Top View)

Evaluation Board Schematic

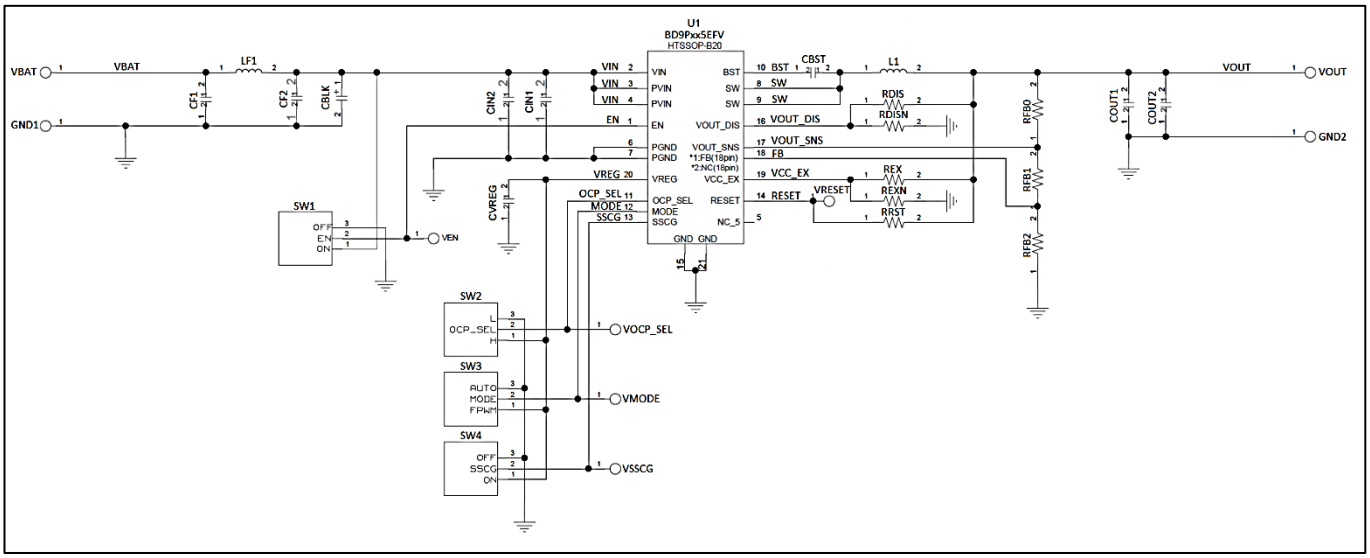

Figure 2. BD9P2x5EFV-C Circuit Diagram

Operating Procedure

1. Turn off EN and connect the GND terminal of the power supply to the GND terminal of Evaluation Board.
2. Connect VCC pin of power supply to the VBAT pin of the Evaluation Board.
3. Connect the load to the Evaluation Board's VOUT and GND terminals. When using an electronic load, connect with the load turned off.
4. Connect a voltmeter to the Evaluation Board's VOUT and GND terminals.
5. Turn on the Power supply of VBAT. Turn ON the switch of EN terminal.
6. Make sure that the voltmeter is set to measure voltage.
7. Turn on the electronic load.

(Caution) This Evaluation Board does not support hot plug. Do not perform hot plug test.

(Note) If EN=High (EN short to VIN) before Power ON, the turn ON and turn OFF is controlled by VBAT only.

© 2020 ROHM Co., Ltd.

Operation Mode Settings

Below is a table of BD9P2x5EFV-C operation modes selectable using OCP_SEL, MODE and SSCG terminals.

Table 2. Mode Settings

Terminal	Setting	Operation Mode	Function
OCP_SEL	HIGH	OCP threshold selection	OCP threshold is set to 2.250A (Typ.) Output Current maximum is 1.5A.
	LOW		OCP threshold is set to 3.0A (Typ.) Output Current maximum is 2.0A.
MODE	HIGH	FPWM	Forced PWM mode
	LOW or OPEN	AUTO	Automatically switched between PWM and LLM mode.
	Apply a clock to this pin	SYNC	Activate synchronization mode
SSCG	ON (HIGH)	Select Spread Spectrum function	Enable Spread Spectrum
	OFF (LOW)		Disable Spread Spectrum

(Note) If setting is High, the terminal is shorted to VREG, and if setting is Low, the terminal is shorted to GND.

© 2020 ROHM Co., Ltd.

Pin Configuration

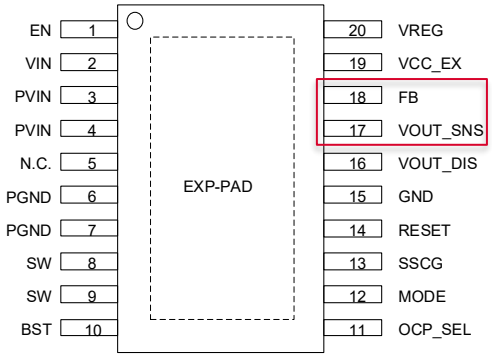

Figure 3. Pin Configuration (BD9P205EFV-C)

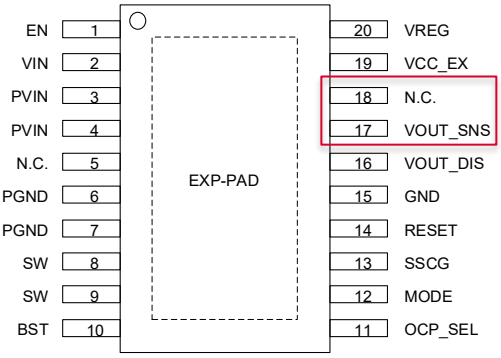

Figure 4. Pin Configuration (BD9P235EFV-C, BD9P255EFV-C)

Pin Description of difference with BD9P205EFV-C and BD9P235EFV-C/BD9P255EFV-C

Table 3. Pin Description

Pin No.	Pin Name	function
17 (BD9P205EFV-C)	VOUT_SNS	Pin to define the clamp voltage of GmAmp2 output and phase compensation. Connect this pin to the output voltage.
17 (BD9P235EFV-C, BD9P255EFV-C)		Inverting input node of the GmAmp1. This pin is used for OVP, SCP and RESET detection. And, this pin is used for defining the clamp voltage of GmAmp2 output and phase compensation. Connect this pin to the output voltage.
18 (BD9P205EFV-C)	FB	Inverting input node of the GmAmp1. This pin is used for OVP, SCP and RESET detection. Connect output voltage divider to this pin to set the output voltage.
18 (BD9P235EFV-C, BD9P255EFV-C)	N.C.	This pin is not connected to the chip. Use this as open. If this pin is used other than open and adjacent pins are expected to be shorted, please confirm if there is any problem with the actual application.

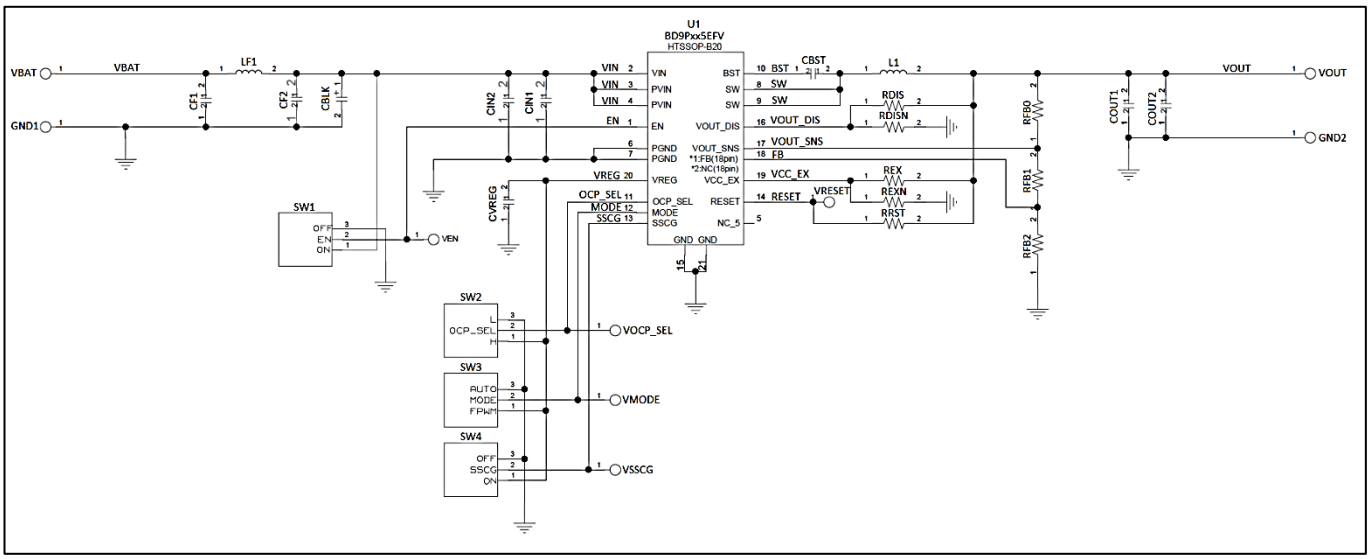

Figure 5. BD9P2x5EFV-C Circuit Diagram

Table 4. PCB Terminal Description

PCB terminal	BD9P205EFV-C	BD9P235EFV-C BD9P255EFV-C
17. VOUT_SNS	VOUT_SNS	VOUT_SNS
18. FB / N.C.	FB / N.C.	FB / N.C.

Pin18 of BD9P205EFV-C and BD9P235EFV-C/BD9P255EFV-C are different terminals, but have the same layout pattern in the PCB board. Please refer to the table above for the configuration of these pin terminals for each IC.

Parts list (BD9P235EFV-C, BD9P255EFV-C)

Table 5. BD9P235EFV-C (3.3V, 2.0A) / BD9P255EFV-C (5.0V, 2.0A) Parts list

	Part No	Value	PKG(inch)	PKG(mm)	Manufacturer	Part Name(Series)
π type filter	CF1	4.7µF	1210	3225	Murata	GCM32ER71H475K
	LF1	2.2µH	2524h18	6360h45	TDK	CLF6045NIT-2R2N-D
	CF2	0.1µF	0402	1005	Murata	GCM155R71H104K
	CBLK	220µF	0404h04	1010h10	Nichicon	UWD1V221MCQ1GS
Basic	CIN2	4.7µF	1210	3225	Murata	GCM32ER71H475K
	CIN1	0.1µF	0402	1005	Murata	GCM155R71H104K
	CVREG	1µF	0805	2012	Murata	GCM21BR71C105K
	CBST	0.1µF	0402	1005	Murata	GCM155R71H104K
	RRST	10kΩ	0603	1608	ROHM	MCR03 Series
Application	L1	3.3µH	2524h18	6360h45	TDK	CLF6045NIT-3R3N-D
	COUT1(Note2)	22µF	1210	3225	Murata	GCM32ER71A226K
	COUT2(Note2)	22µF	1210	3225	Murata	GCM32ER71A226K
	RFB0	0Ω	0603	1608	ROHM	MCR03 Series
	RFB1	Open	-	-	-	-
	RFB2	Open	-	-	-	-
	RDIS	0Ω	0603	1608	ROHM	MCR03 Series
	RDISN	Open	-	-	-	-
	REX(Note2)	0Ω	0603	1608	ROHM	MCR03 Series
	REXN(Note2)	Open	-	-	-	-

Parts list (BD9P205EFV-C)

Table 6. BD9P205EFV-C (1.3V, 2.0A) Parts list

	Part No	Value	PKG(inch)	PKG(mm)	Manufacturer	Part Name(Series)
π type filter	CF1	4.7µF	1210	3225	Murata	GCM32ER71H475K
	LF1	2.2µH	2524h18	6360h45	TDK	CLF6045NIT-2R2N-D
	CF2	0.1µF	0402	1005	Murata	GCM155R71H104K
	CBLK	220µF	0404h04	1010h10	Nichicon	UWD1V221MCQ1GS
Basic	CIN2	4.7µF	1210	3225	Murata	GCM32ER71H475K
	CIN1	0.1µF	0402	1005	Murata	GCM155R71H104K
	CVREG	1µF	0805	2012	Murata	GCM21BR71C105K
	CBST	0.1µF	0402	1005	Murata	GCM155R71H104K
	RRST	10kΩ	0603	1608	ROHM	MCR03 Series
Application	L1	3.3µH	2524h18	6360h45	TDK	CLF6045NIT-3R3N-D
	COUT1(Note2)	22µF x3pcs	1210	3225	Murata	GCM32ER71A226K
	COUT2(Note2)	22µF x3pcs	1210	3225	Murata	GCM32ER71A226K
	RFB0	0Ω	0603	1608	ROHM	MCR03 Series
	RFB1	15kΩ	0603	1608	ROHM	MCR03 Series
	RFB2	24kΩ	0603	1608	ROHM	MCR03 Series
	RDIS	0Ω	0603	1608	ROHM	MCR03 Series
	RDISN	Open	-	-	-	-
	REX(Note2)	Open	-	-	-	-
	REXN(Note2)	0Ω	0603	1608	ROHM	MCR03 Series

© 2020 ROHM Co., Ltd.

Table 7. BD9P205EFV-C (3.3V, 2.0A) Parts list

	Part No	Value	PKG(inch)	PKG(mm)	Manufacturer	Part Name(Series)
π type filter	CF1	4.7μF	1210	3225	Murata	GCM32ER71H475K
	LF1	2.2μH	2524h18	6360h45	TDK	CLF6045NIT-2R2N-D
	CF2	0.1μF	0402	1005	Murata	GCM155R71H104K
	CBLK	220μF	0404h04	1010h10	Nichicon	UWD1V221MCQ1GS
Basic	CIN2	4.7μF	1210	3225	Murata	GCM32ER71H475K
	CIN1	0.1μF	0402	1005	Murata	GCM155R71H104K
	CVREG	1μF	0805	2012	Murata	GCM21BR71C105K
	CBST	0.1μF	0402	1005	Murata	GCM155R71H104K
	RRST	10kΩ	0603	1608	ROHM	MCR03 Series
Application	L1	3.3μH	2524h18	6360h45	TDK	CLF6045NIT-3R3N-D
	COUT1(Note2)	22μF	1210	3225	Murata	GCM32ER71A226K
	COUT2(Note2)	22μF	1210	3225	Murata	GCM32ER71A226K
	RFB0	0Ω	0603	1608	ROHM	MCR03 Series
	RFB1	75kΩ	0603	1608	ROHM	MCR03 Series
	RFB2	24kΩ	0603	1608	ROHM	MCR03 Series
	RDIS	0Ω	0603	1608	ROHM	MCR03 Series
	RDISN	Open	-	-	-	-
	REX(Note2)	0Ω	0603	1608	ROHM	MCR03 Series
	REXN(Note2)	Open	-	-	-	-

Table 8. BD9P205EFV-C (5.0V, 2.0A) Parts list

	Part No	Value	PKG(inch)	PKG(mm)	Manufacturer	Part Name(Series)
π type filter	CF1	4.7μF	1210	3225	Murata	GCM32ER71H475K
	LF1	2.2μH	2524h18	6360h45	TDK	CLF6045NIT-2R2N-D
	CF2	0.1μF	0402	1005	Murata	GCM155R71H104K
	CBLK	220μF	0404h04	1010h10	Nichicon	UWD1V221MCQ1GS
Basic	CIN2	4.7μF	1210	3225	Murata	GCM32ER71H475K
	CIN1	0.1μF	0402	1005	Murata	GCM155R71H104K
	CVREG	1μF	0805	2012	Murata	GCM21BR71C105K
	CBST	0.1μF	0402	1005	Murata	GCM155R71H104K
	RRST	10kΩ	0603	1608	ROHM	MCR03 Series
Application	L1	3.3μH	2524h18	6360h45	TDK	CLF6045NIT-3R3N-D
	COUT1(Note2)	22μF	1210	3225	Murata	GCM32ER71A226K
	COUT2(Note2)	22μF	1210	3225	Murata	GCM32ER71A226K
	RFB0	0Ω	0603	1608	ROHM	MCR03 Series
	RFB1	68kΩ	0603	1608	ROHM	MCR03 Series
	RFB2	13kΩ	0603	1608	ROHM	MCR03 Series
	RDIS	0Ω	0603	1608	ROHM	MCR03 Series
	RDISN	Open	-	-	-	-
	REX(Note2)	0Ω	0603	1608	ROHM	MCR03 Series
	REXN(Note2)	Open	-	-	-	-

© 2020 ROHM Co., Ltd.

Table 9. BD9P205EFV-C (6.0V, 2.0A) Parts list

	Part No	Value	PKG(inch)	PKG(mm)	Manufacturer	Part Name(Series)
π type filter	CF1	4.7μF	1210	3225	Murata	GCM32ER71H475K
	LF1	2.2μH	2524h18	6360h45	TDK	CLF6045NIT-2R2N-D
	CF2	0.1μF	0402	1005	Murata	GCM155R71H104K
	CBLK	220μF	0404h04	1010h10	Nichicon	UWD1V221MCQ1GS
Basic	CIN2	4.7μF	1210	3225	Murata	GCM32ER71H475K
	CIN1	0.1μF	0402	1005	Murata	GCM155R71H104K
	CVREG	1μF	0805	2012	Murata	GCM21BR71C105K
	CBST	0.1μF	0402	1005	Murata	GCM155R71H104K
	RRST	10kΩ	0603	1608	ROHM	MCR03 Series
Application	L1	3.3μH	2524h18	6360h45	TDK	CLF6045NIT-3R3N-D
	COUT1(Note2)	22μF	1210	3225	Murata	GCM32ER71A226K
	COUT2(Note2)	22μF	1210	3225	Murata	GCM32ER71A226K
	RFB0	0Ω	0603	1608	ROHM	MCR03 Series
	RFB1	130kΩ	0603	1608	ROHM	MCR03 Series
	RFB2	20kΩ	0603	1608	ROHM	MCR03 Series
	RDIS	0Ω	0603	1608	ROHM	MCR03 Series
	RDISN	Open	-	-	-	-
	REX(Note2)	Open	-	-	-	-
	REXN(Note2)	0Ω	0603	1608	ROHM	MCR03 Series

Table 10. BD9P205EFV-C (8.3V, 2.0A) Parts list

	Part No	Value	PKG(inch)	PKG(mm)	Manufacturer	Part Name(Series)
π type filter	CF1	4.7μF	1210	3225	Murata	GCM32ER71H475K
	LF1	2.2μH	2524h18	6360h45	TDK	CLF6045NIT-2R2N-D
	CF2	0.1μF	0402	1005	Murata	GCM155R71H104K
	CBLK	220μF	0404h04	1010h10	Nichicon	UWD1V221MCQ1GS
Basic	CIN2	4.7μF	1210	3225	Murata	GCM32ER71H475K
	CIN1	0.1μF	0402	1005	Murata	GCM155R71H104K
	CVREG	1μF	0805	2012	Murata	GCM21BR71C105K
	CBST	0.1μF	0402	1005	Murata	GCM155R71H104K
	RRST	Open	-	-	-	-
Application	L1	3.3μH	2524h18	6360h45	TDK	CLF6045NIT-3R3N-D
	COUT1(Note2)	22μF	1210	3225	Murata	GCM32ER71A226K
	COUT2(Note2)	22μF	1210	3225	Murata	GCM32ER71A226K
	RFB0	0Ω	0603	1608	ROHM	MCR03 Series
	RFB1	150kΩ	0603	1608	ROHM	MCR03 Series
	RFB2	16kΩ	0603	1608	ROHM	MCR03 Series
	RDIS	0Ω	0603	1608	ROHM	MCR03 Series
	RDISN	Open	-	-	-	-
	REX(Note2)	Open	-	-	-	-
	REXN(Note2)	0Ω	0603	1608	ROHM	MCR03 Series
	RRST2(Note3)	10kΩ	0603	1608	ROHM	MCR03 Series

© 2020 ROHM Co., Ltd.

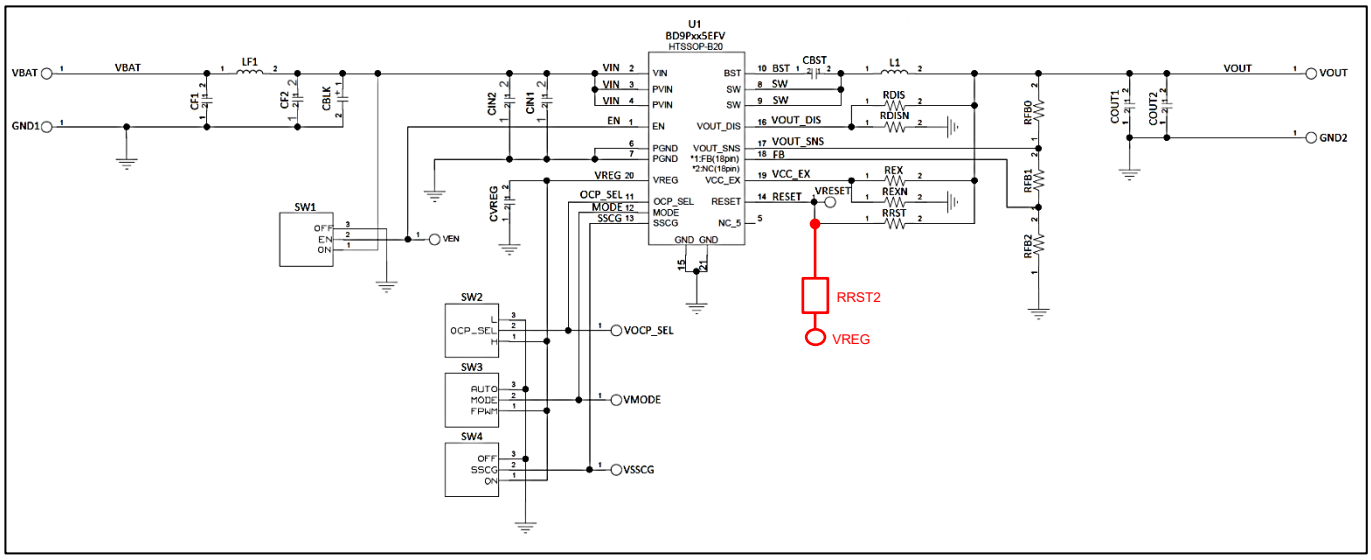

Figure 6. BD9P205EFV-C (8.3V, 2.0A) Circuit Diagram

(Note 1)

Output Voltage	Recommended COUT Value
≥ 3.3V	44uF (Typ) or more
< 3.3V	$C_{out} \geqq \frac{145.2}{Vout}$ [μF] (V_{out} is the output voltage [V])

(Note 2) VCC_EX is power supply input for internal circuit. VREG voltage is supplied from VCC_EX when voltage between 3.2V (V_{TEXH}, Max) and 5.65 V (V_{EXOVPL}, Min) is connected to this pin. Connecting this pin to VOUT improves efficiency. In case of not use this function, connect this pin to GND.

Output Voltage	REX setting	REXN setting	VCC_EX State
3.2V ≤ Vout ≤ 5.65V	0Ω	Open	Connected to VOUT
3.2V > Vout > 5.65V	Open	0Ω	Connected to GND

(Note 3) RESET terminal should be pulled-up to VREG manually using RRST2 when the output setting is over 6.5V. Because RESET pin's absolute maximum rating is 7.0V. If RESET is not pulled-up to VOUT, it can be pulled-up to VREG manually using RRST2 by default.

Since PCB doesn't have provision for RRST2 (RESET pulled-up to VREG), RRST2 has to be added manually.

© 2020 ROHM Co., Ltd.

Board Layout

Evaluation Board PCB information

Number of Layers	Material	Board Size	Copper Thickness
4	FR-4 HITG	100mm x 75mm x 1.6mm	2oz(70µm) / 1oz (35µm) / 1oz (35µm) / 2oz(70µm)

The layout of BD9Pxx5EFV is shown below.

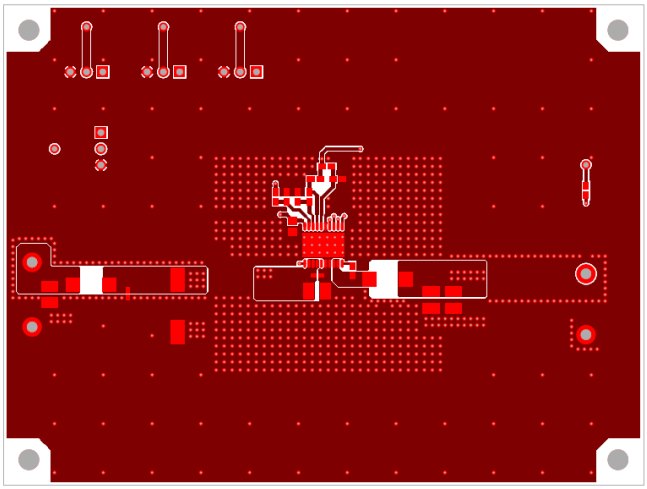

Figure 7. Top Layer Layout
(Top View)

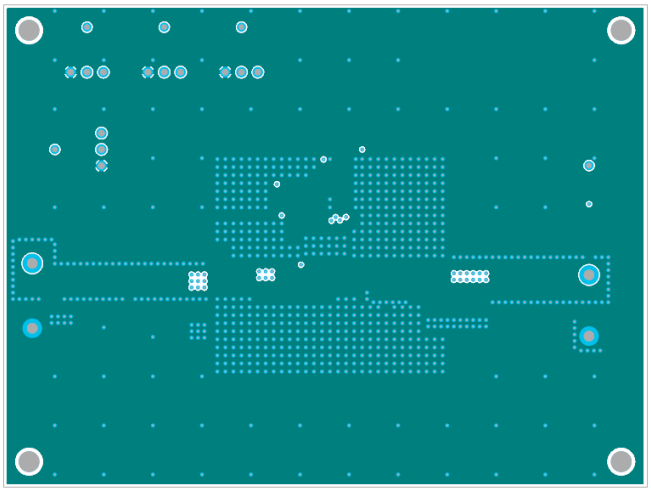

Figure 8. Middle1 Layer Layout
(Top View)

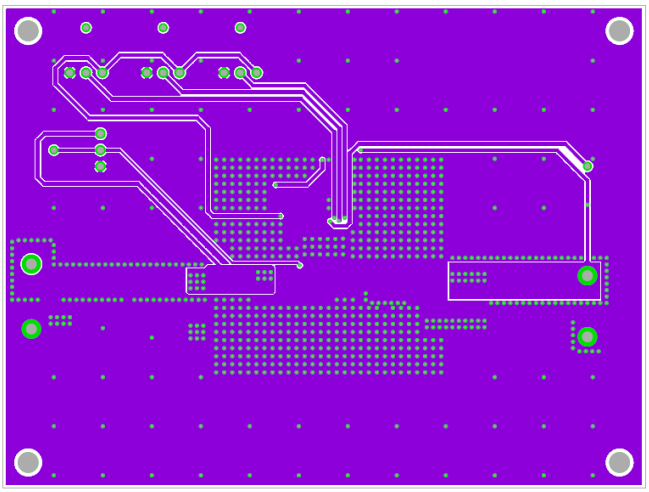

Figure 9. Middle2 Layer Layout
(Top View)

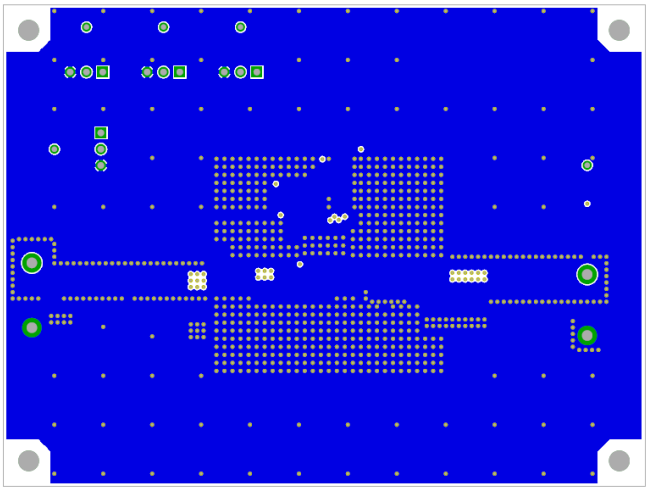

Figure 10. Bottom Layer Layout
(Top View)

© 2020 ROHM Co., Ltd.

Reference application data (BD9P235EFV-C)

(Ta=25°C)

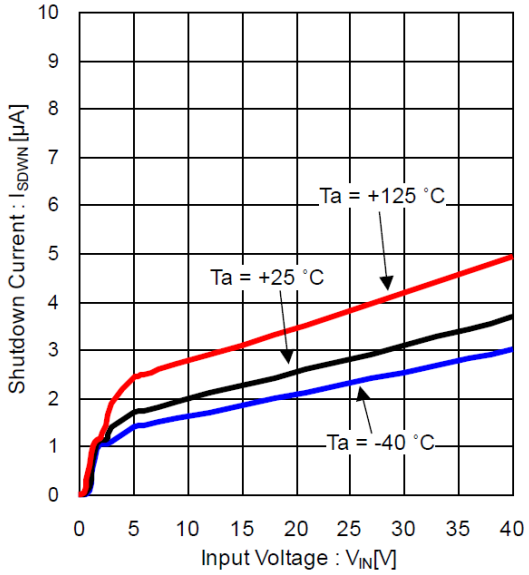

Figure 11. Shutdown Current vs Input Voltage

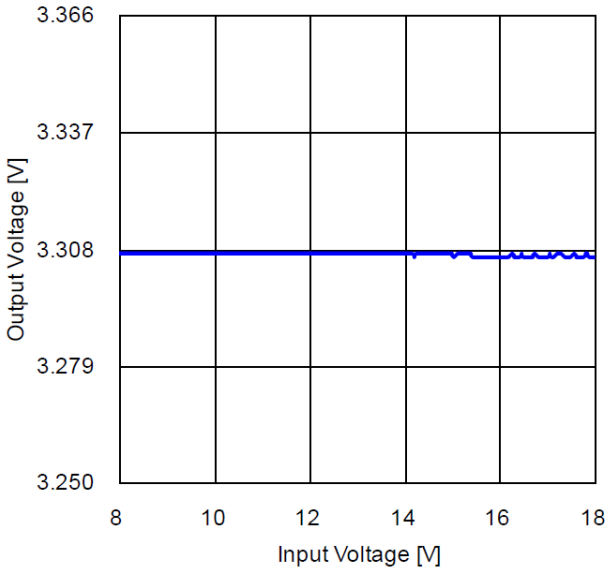

Figure 12. Line Regulation (IOUT = 2 A)

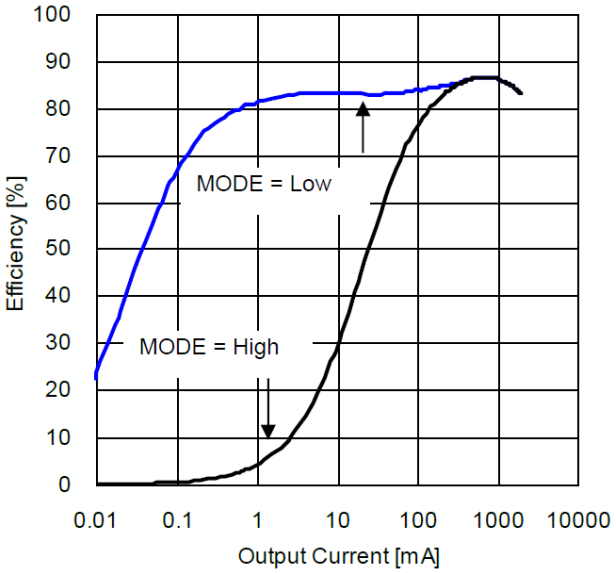

Figure 13. Efficiency vs Output Current (VIN = 12V)

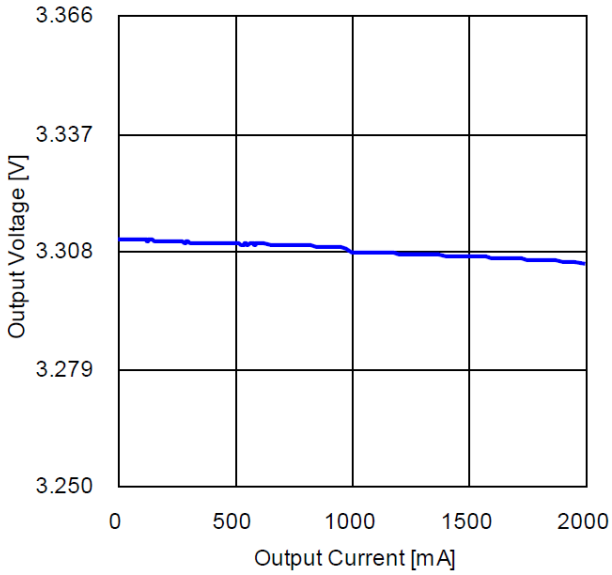

Figure 14. Load Regulation (VIN = 12 V)

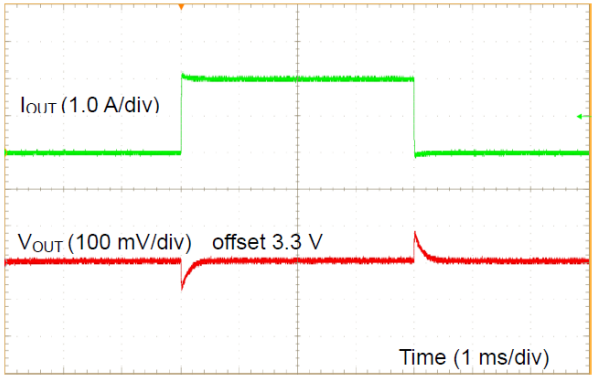

Figure 15. Load Response 1

(VIN = 12 V, VMODE = 5 V, IOUT = 0 A to 2 A)

Other series application data please refer to datasheet.

© 2020 ROHM Co., Ltd.

Revision History

Date	Revision Number	Description
26. Nov. 2020	001	Initial release
24. Dec. 2024	002	Add the VOUT setting value of Test Board to Introduction

© 2020 ROHM Co., Ltd.

Notice

1) The information contained in this document is intended to introduce ROHM Group (hereafter referred to asROHM) products. When using ROHM products, please verify the latest specifications or datasheets before use.

2) ROHM products are designed and manufactured for use in general electronic equipment and applications (such as Audio Visual equipment, Office Automation equipment, telecommunication equipment, home appliances, amusement devices, etc.) or specified in the datasheets. Therefore, please contact the ROHM sales representative before using ROHM products in equipment or devices requiring extremely high reliability and whose failure or malfunction may cause danger or injury to human life or body or other serious damage (such as medical equipment, transportation, traffic, aircraft, spacecraft, nuclear power controllers, fuel control, automotive equipment including car accessories, etc. hereafter referred to as Specific Applications). Unless otherwise agreed in writing by ROHM in advance, ROHM shall not be in any way responsible or liable for any damages, expenses, or losses incurred by you or third parties arising from the use of ROHM Products for Specific Applications.

3) Electronic components, including semiconductors, can fail or malfunction at a certain rate. Please be sure to implement, at your own responsibilities, adequate safety measures including but not limited to fail-safe design against physical injury, and damage to any property, which a failure or malfunction of products may cause.

4) The information contained in this document, including application circuit examples and their constants, is intended to explain the standard operation and usage of ROHM products, and is not intended to guarantee, either explicitly or implicitly, the operation of the product in the actual equipment it will be used. As a result, you are solely responsible for it, and you must exercise your own independent verification and judgment in the use of such information contained in this document. ROHM shall not be in any way responsible or liable for any damages, expenses, or losses incurred by you or third parties arising from the use of such information.

5) When exporting ROHM products or technologies described in this document to other countries, you must abide by the procedures and provisions stipulated in all applicable export laws and regulations, such as the Foreign Exchange and Foreign Trade Act and the US Export Administration Regulations, and follow the necessary procedures in accordance with these provisions.

6) The technical information and data described in this document, including typical application circuits, are examples only and are not intended to guarantee to be free from infringement of third parties intellectual property or other rights. ROHM does not grant any license, express or implied, to implement, use, or exploit any intellectual property or other rights owned or controlled by ROHM or any third parties with respect to the information contained herein.

7) No part of this document may be reprinted or reproduced in any form by any means without the prior written consent of ROHM.

8) All information contained in this document is current as of the date of publication and subject to change without notice. Before purchasing or using ROHM products, please confirm the latest information with the ROHM sales representative.

9) ROHM does not warrant that the information contained herein is error-free. ROHM shall not be in any way responsible or liable for any damages, expenses, or losses incurred by you or third parties resulting from errors contained in this document.

Thank you for your accessing to ROHM product informations.
More detail product informations and catalogs are available, please contact us.

ROHM Customer Support System

https://www.rohm.com/contactus

© 2023 ROHM Co., Ltd. All rights reserved.