热设计

TO252 封装热阻情报

本应用笔记记载了使用 TO252 封装进行热设计所需的热阻信息。请作为设计初期进行温度评估时的参考值使用。

目次

1. 封装概要 2
2. 基于 JEDEC STANDARD 环境下的热阻以及热特性参数 2
2-1. 测量环境 2
2-2. 数值 2
2-3. PCB 规格 1 层（1s） 3
2-4. PCB 规格 4 层（2s2p） 4
3. 各参数变化时的热阻及热 000 特性参数 5
3-1. 铜箔面积的变化 5
3-1-1. 1 层 5
3-1-2. 2 层、仅 Bottom 层的铜箔面积变化的情况 6
3-1-3. 2 层、多层的铜箔面积变化的情况 7
3-1-4. 4 层、多层的铜箔面积变化的情况 8
3-1-5. 4 层、仅 Bottom 层的铜箔面积变化的情况 9
3-1-6. 6 层、多层的铜箔面积变化的情况 10
3-1-7. 6 层、仅 Bottom 层的铜箔面积变化的情况 11
3-1-8. 8 层、多层的铜箔面积变化的情况 12
3-1-9. 8 层、仅 Bottom 层的铜箔面积变化的情况 13
3-2. 铜箔厚度的变化 14
3-2-1. 1 层 14
3-2-2. 2 层 15
3-2-3. 4 层 16
3-3. 热通孔配置 17
3-3-1. 2 层 17
3-3-2. 4 层 18
3-4. 基板厚度的变化 19
3-4-1. 1 层 19
3-4-2. 2 层 20
3-4-3. 4 层 21
4. 瞬态热阻 22
4-1. 瞬态热阻 1 层 22
4-2. 瞬态热阻 2 层 25
4-3. 瞬态热阻 4 层 26

© 2022 ROHM Co., Ltd.

1. 封装概要

封装名：TO252
TO252-J3
TO252-5
TO252-J5

封装组别：TO

这个应用笔记，作为代表封装使用 TO252-3 的数据。其他的封装，严密的讲，虽然热阻值不同，但是在初期设计时，作为测试温度用途，是在允许范围内，可以使用相同的值。

TO252-3 外形尺寸

W (typ) D (typ) H (max)
6.5mm × 9.5mm × 2.5mm

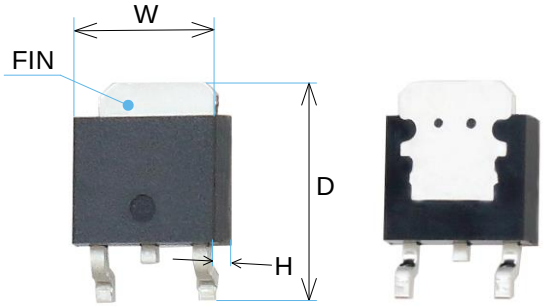

2. 基于 JEDEC STANDARD 环境下的热阻以及热特性参数

2-1. 测量环境

内容	标准
测量环境	JEDEC STANDARD JESD51-2A (Still Air)
测量基板标准	JEDEC STANDARD JESD51-3 JESD51-5 JESD51-7

2-2. 数值

状态	θ_{JA} (°C/W)	Ψ_{JT} (°C/W)
1 层 (1s)	132.2	13
4 层 (2s2p)	23.2	2

θ_{JA}：结温 T_J 与环境温度 T_A 之间的热阻

Ψ_{JT}：结温 T_J 与封装表面中央温度 T_T 之间的热特性参数

注意：本应用笔记中的热阻和热特性参数是在符合 JEDEC STANDARD 的测量环境中的值，因此不一定与实机一致。有必要考虑由于 PCB 特性、PCB 布局、器件配置、壳体形状、周围环境等的影响值发生变化。

© 2022 ROHM Co., Ltd.

2-3. PCB 规格 1 层 (1s)

JEDEC 标准 JESD51 准则

项目		值
基板厚度		1.57mm
基板外形尺寸		76.2mm × 114.3mm
基板材质		FR-4
铜箔厚度 (完成厚度)	Top	70µm (2 oz)
导线宽度		0.254mm
铜箔范围	Top	49mm^2 (Footprint)

Table 2-3-1. 1 层 PCB 规格

Figure 2-3-1. 1 层基板截面图

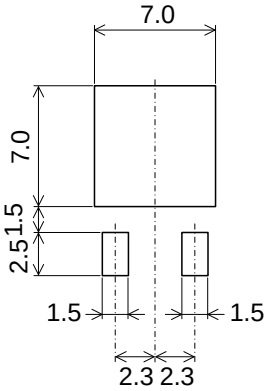

Figure 2-3-2. Footprint 尺寸

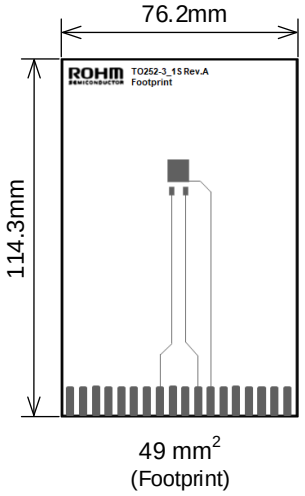

Figure 2-3-3. Top layer

© 2022 ROHM Co., Ltd.

2-4. PCB 规格 4 层 (2s2p)

JEDEC 标准 JESD51 准则

项目		值
基板厚度		1.60mm
基板外形尺寸		76.2mm × 114.3mm
基板材质		FR-4
铜箔厚度 (完成厚度)	Top Middle 1 Middle 2 Bottom	70µm (2 oz) 35µm (1 oz) 35µm (1 oz) 70µm (2 oz)
导线宽度		0.254mm
铜箔范围	Top Middle 1 Middle 2 Bottom	49mm^2 (Footprint) 5505mm^2 (74.2mm×74.2mm) 5505mm^2 (74.2mm×74.2mm) 5505mm^2 (74.2mm×74.2mm)

Table 2-4-1. 4 层 PCB 规格

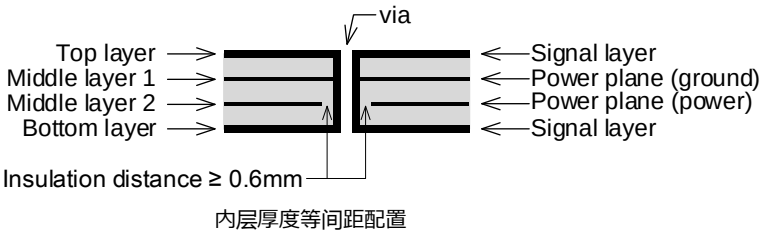

Figure 2-4-2. 4 层基板截面图

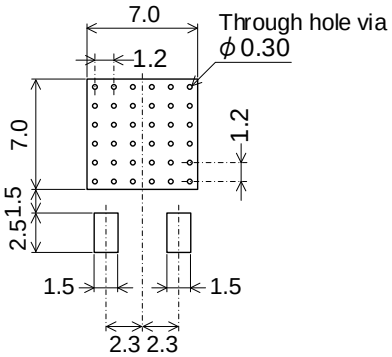

Figure 2-4-3. Footprint 尺寸

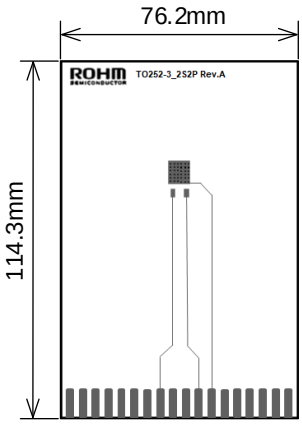

Figure 2-4-4.
Top layer

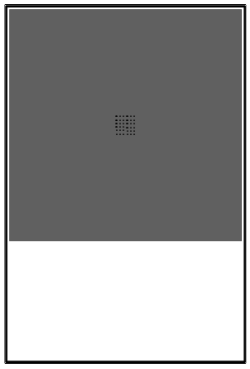

Figure 2-4-5.
Middle 1 layer

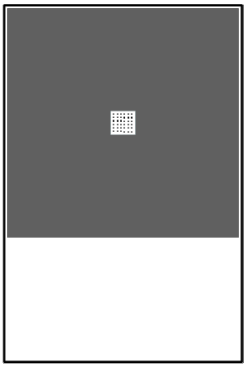

Figure 2-4-6.
Middle 2 layer

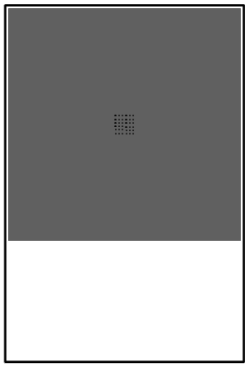

Figure 2-4-7.
Bottom layer

3. 各参数变化时的热阻及热 000 特性参数

3-1. 铜箔面积的变化

3-1-1. 1 层

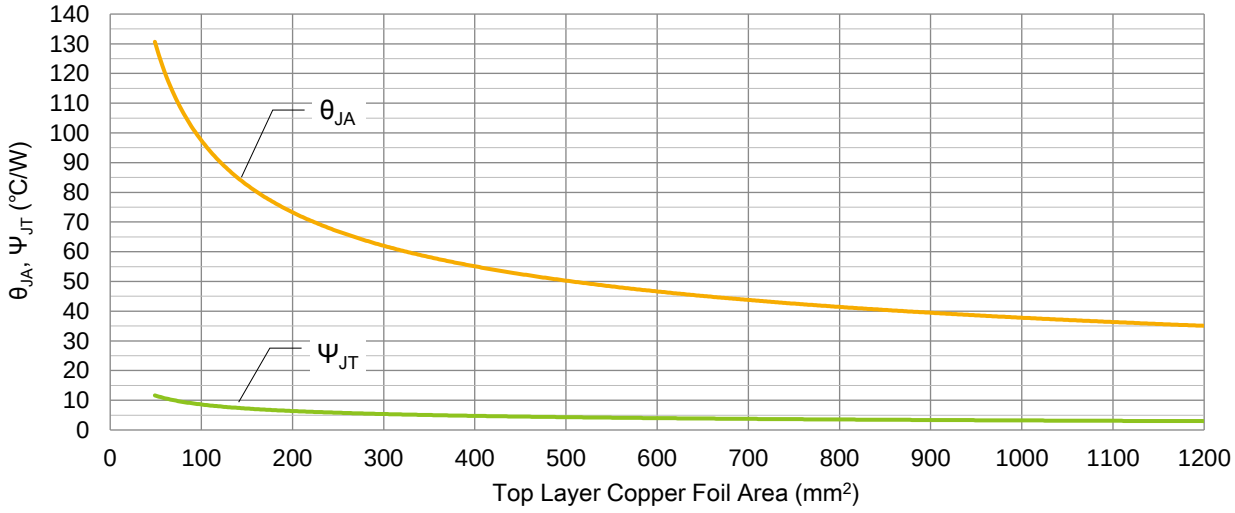

Figure 3-1-1-1. θ_{JA}, Ψ_{JT} vs 铜箔面积

Figure 3-1-1-2. 1 层基板截面图

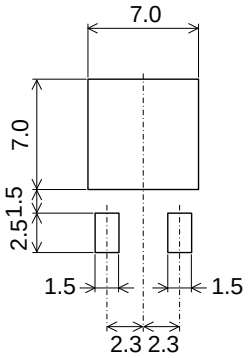

Figure 3-1-1-3. Footprint 尺寸

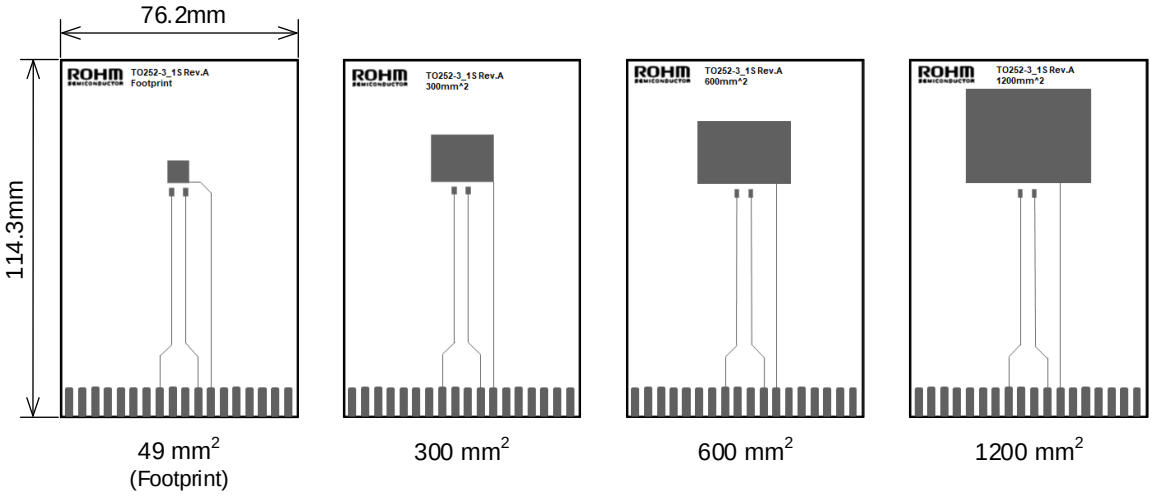

Figure 3-1-1-4. Top layer

3-1. 铜箔面积的变化（继续）

3-1-2. 2 层、仅 Bottom 层的铜箔面积变化的情况

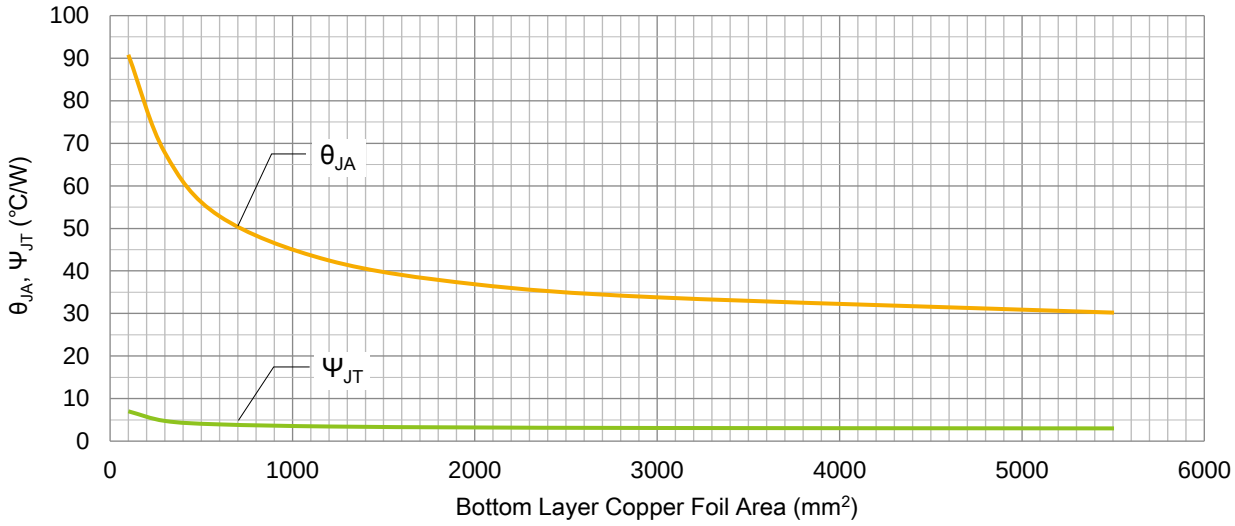

Figure 3-1-2-1. θ_{JA}, Ψ_{JT} vs 铜箔面积

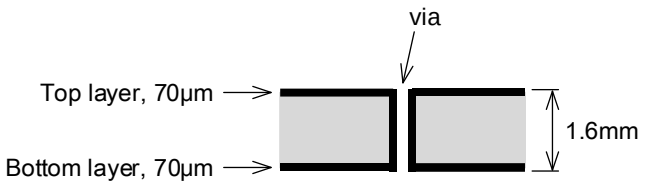

Figure 3-1-2-2. 2 层基板截面图

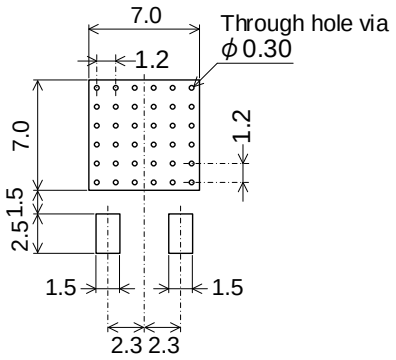

Figure 3-1-2-3. Footprint 尺寸

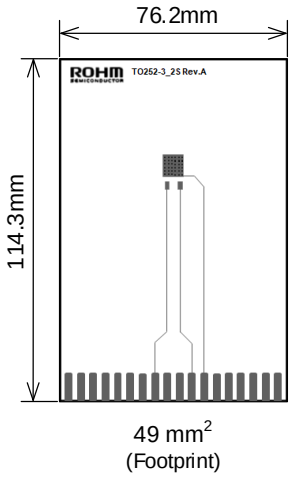

Figure 3-1-2-4. Top layer

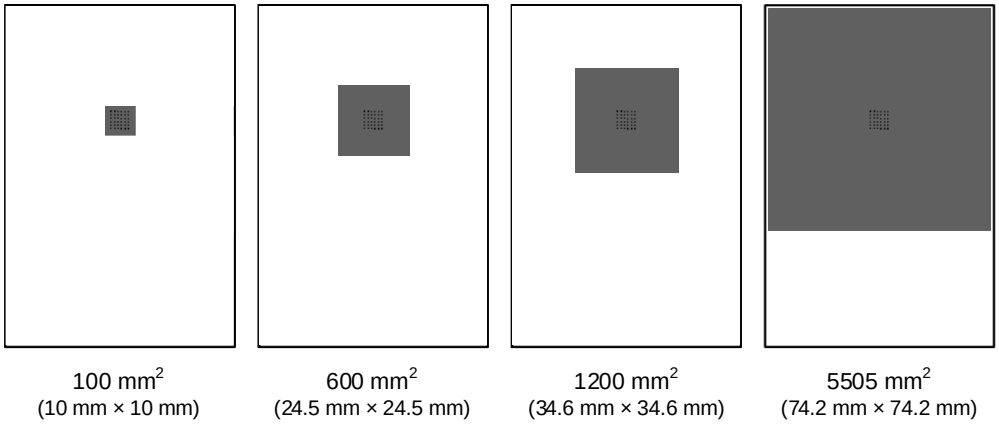

Figure 3-1-2-5. Bottom layer

© 2022 ROHM Co., Ltd.

3-1. 铜箔面积的变化（继续）

3-1-3. 2 层、多层的铜箔面积变化的情况

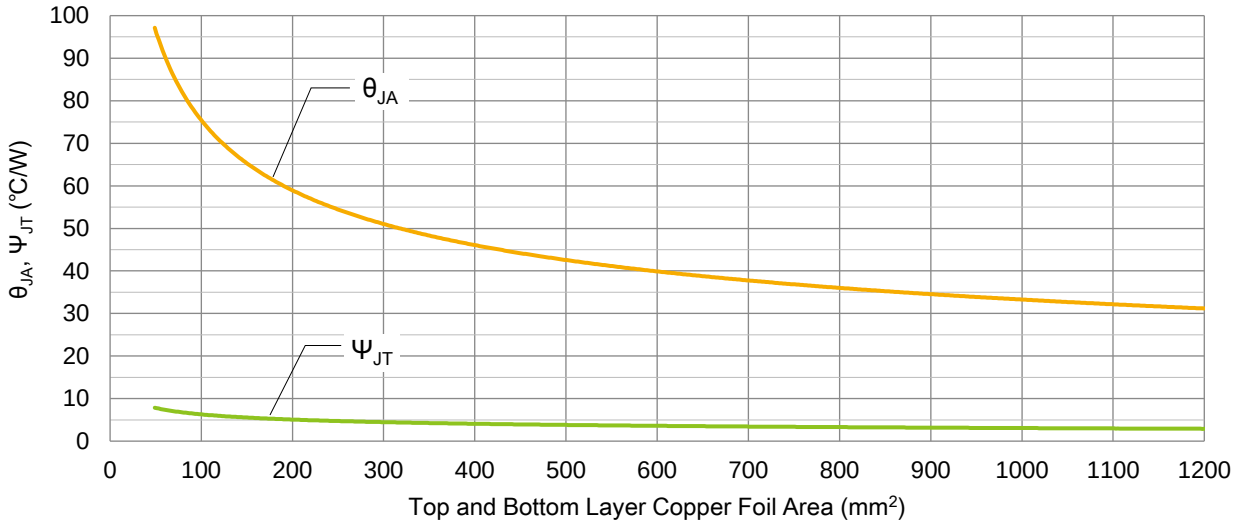

Figure 3-1-3-1. θ_{JA}, Ψ_{JT} vs 铜箔面积

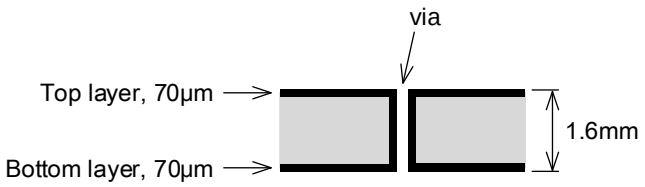

Figure 3-1-3-2. 2 层基板截面图

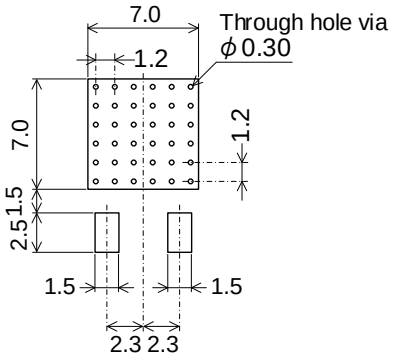

Figure 3-1-3-3. Footprint 尺寸

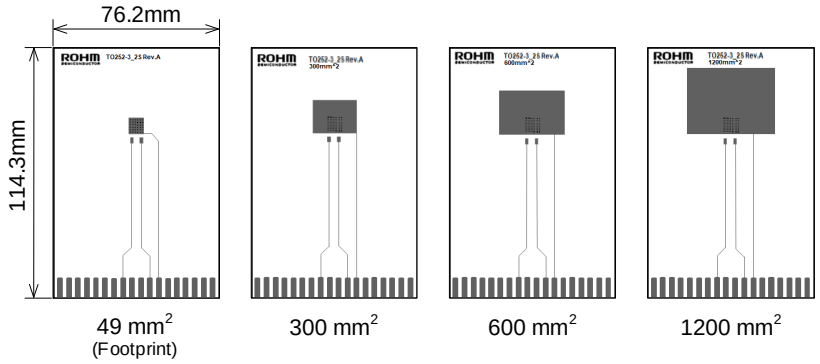

Figure 3-1-3-4. Top layer

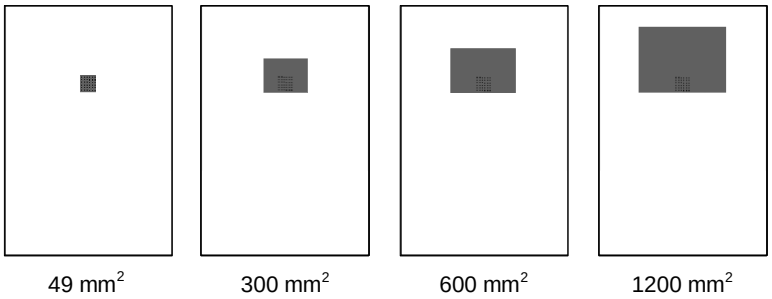

Figure 3-1-3-5. Bottom layer

© 2022 ROHM Co., Ltd.

3-1. 铜箔面积的变化（继续）

3-1-4. 4 层、多层的铜箔面积变化的情况

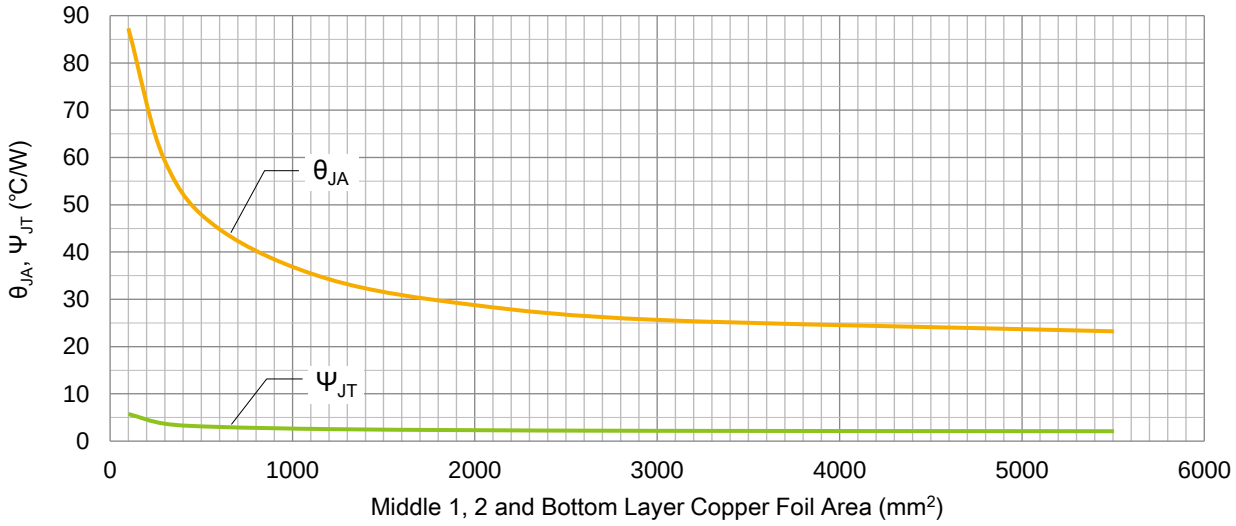

Figure 3-1-4-1. θ_{JA}, Ψ_{JT} vs 铜箔面积

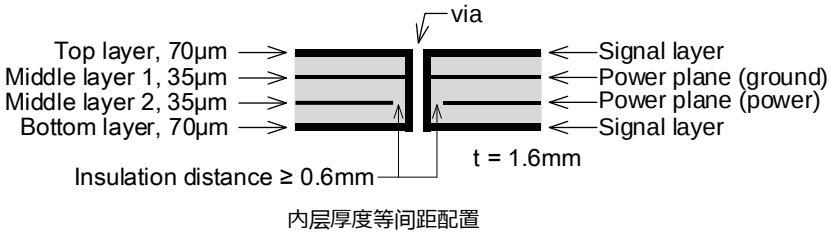

Figure 3-1-4-2. 4 层基板截面图

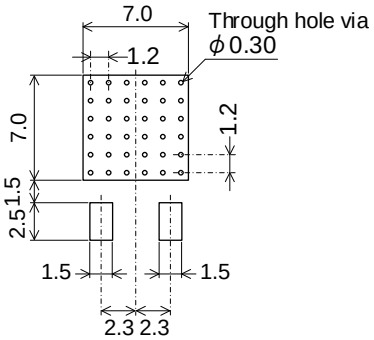

Figure 3-1-4-3. Footprint 尺寸

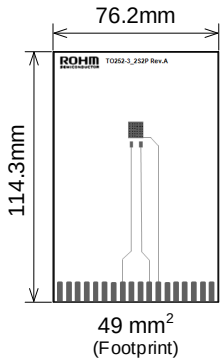

Figure 3-1-4-4. Top layer

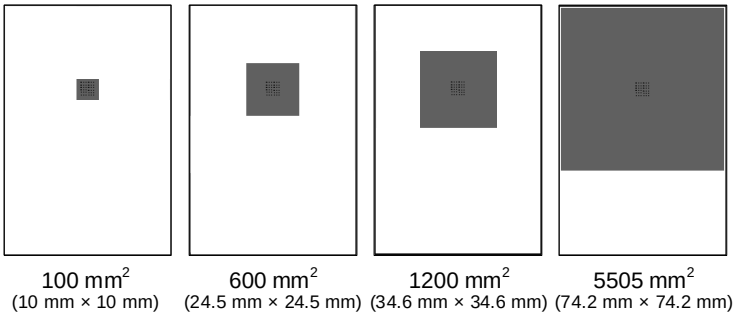

Figure 3-1-4-5. Middle layer 1, Bottom layer

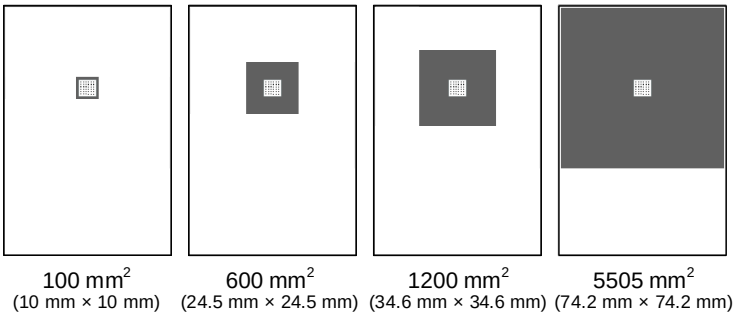

Figure 3-1-4-6. Middle layer 2

© 2022 ROHM Co., Ltd.

3-1. 铜箔面积的变化（继续）

3-1-5. 4 层、仅 Bottom 层的铜箔面积变化的情况

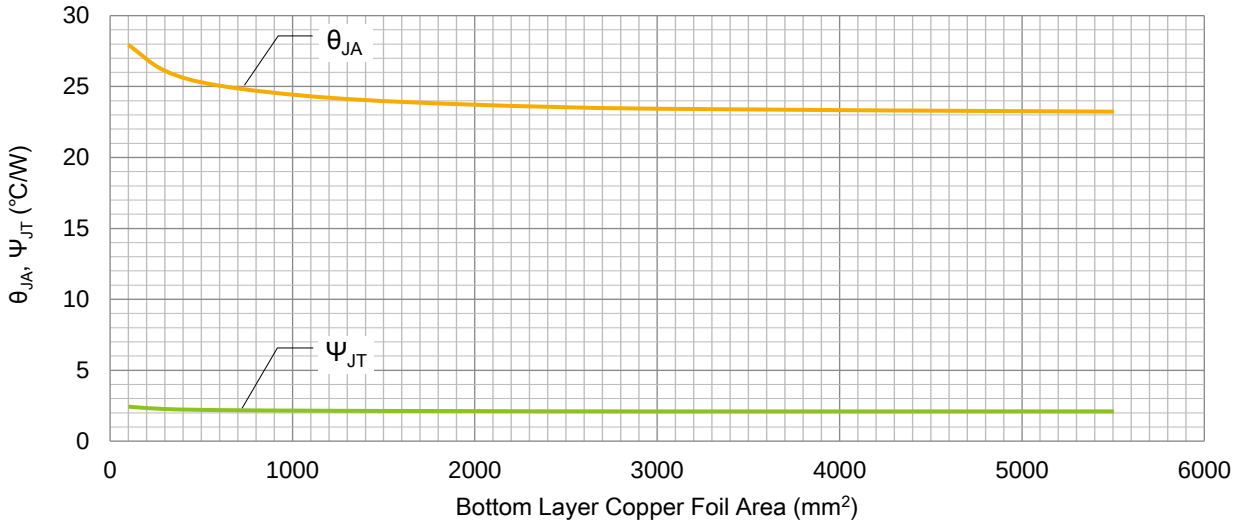

Figure 3-1-5-1. θ_{JA}, Ψ_{JT} vs 铜箔面积

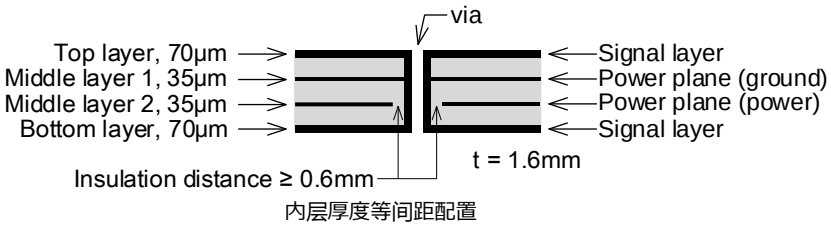

Figure 3-1-5-2. 4 层基板截面图

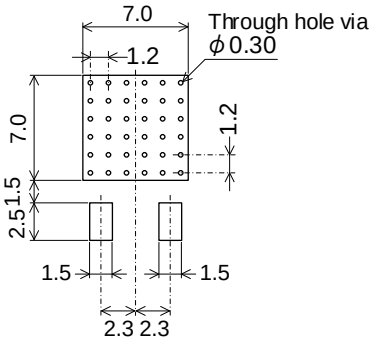

Figure 3-1-5-3. Footprint 尺寸

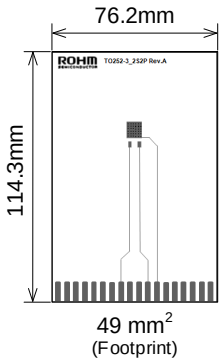

Figure 3-1-5-4. Top layer

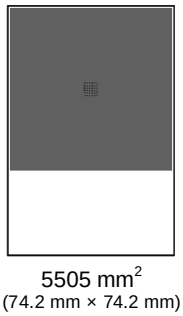

Figure 3-1-5-5. Middle layer 1

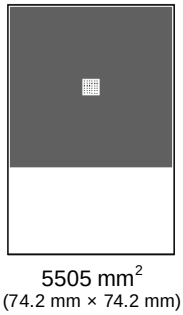

Figure 3-1-5-6. Middle layer 2

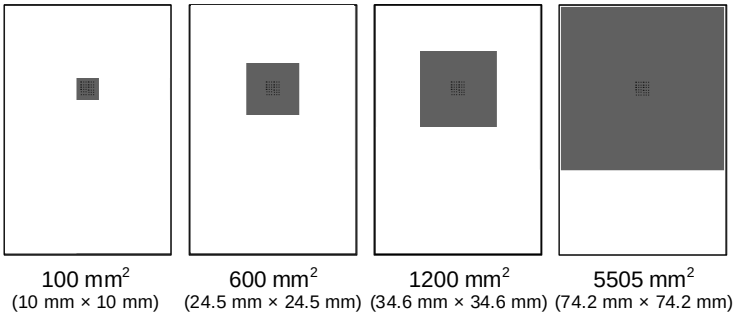

Figure 3-1-5-7. Bottom layer

© 2022 ROHM Co., Ltd.

3-1. 铜箔面积的变化（继续）

3-1-6. 6 层、多层的铜箔面积变化的情况

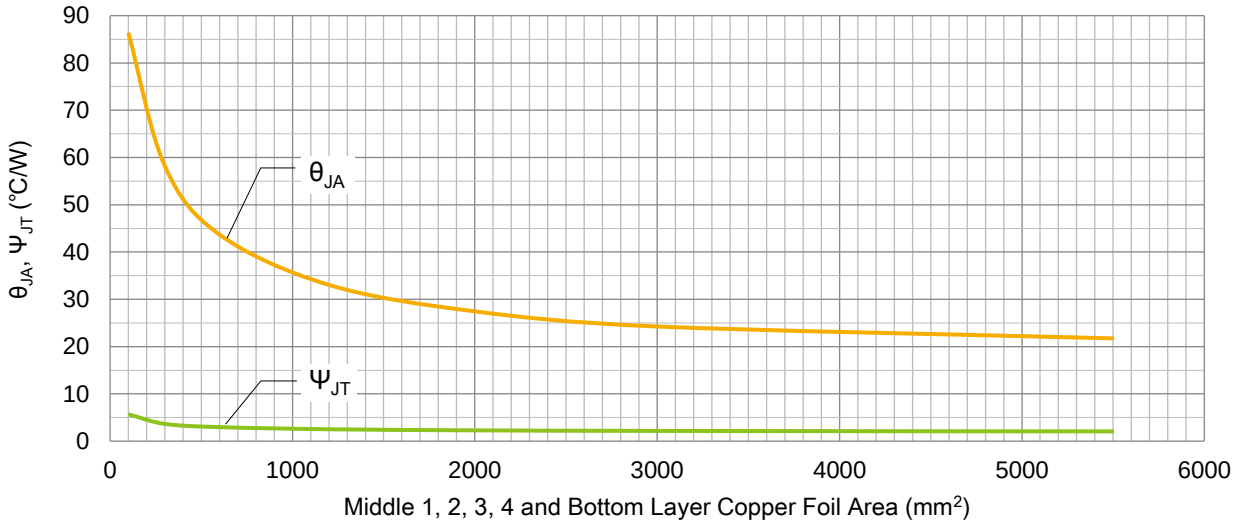

Figure 3-1-6-1. θ_{JA}, Ψ_{JT} vs 铜箔面积

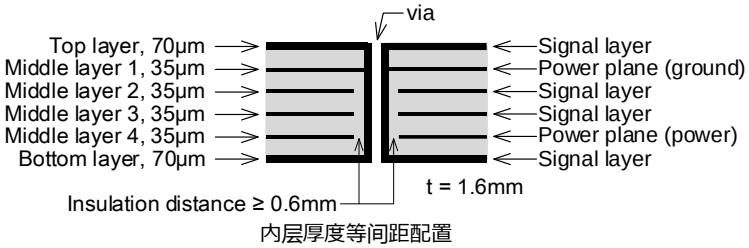

Figure 3-1-6-2. 6 层基板截面图

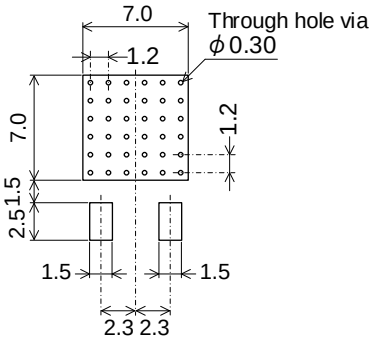

Figure 3-1-6-3. Footprint 尺寸

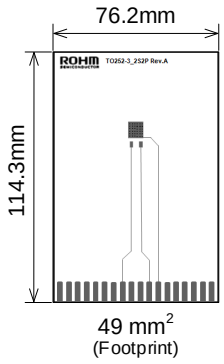

Figure 3-1-6-4. Top layer

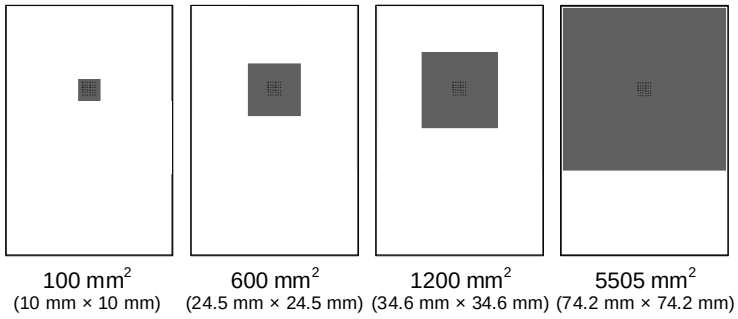

Figure 3-1-6-5. Middle layer 1, Bottom layer

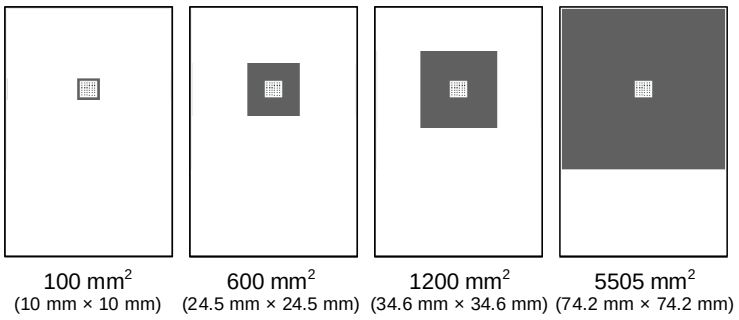

Figure 3-1-6-6. Middle layer 2, 3, 4

© 2022 ROHM Co., Ltd.

3-1. 铜箔面积的变化（继续）

3-1-7. 6 层、仅 Bottom 层的铜箔面积变化的情况

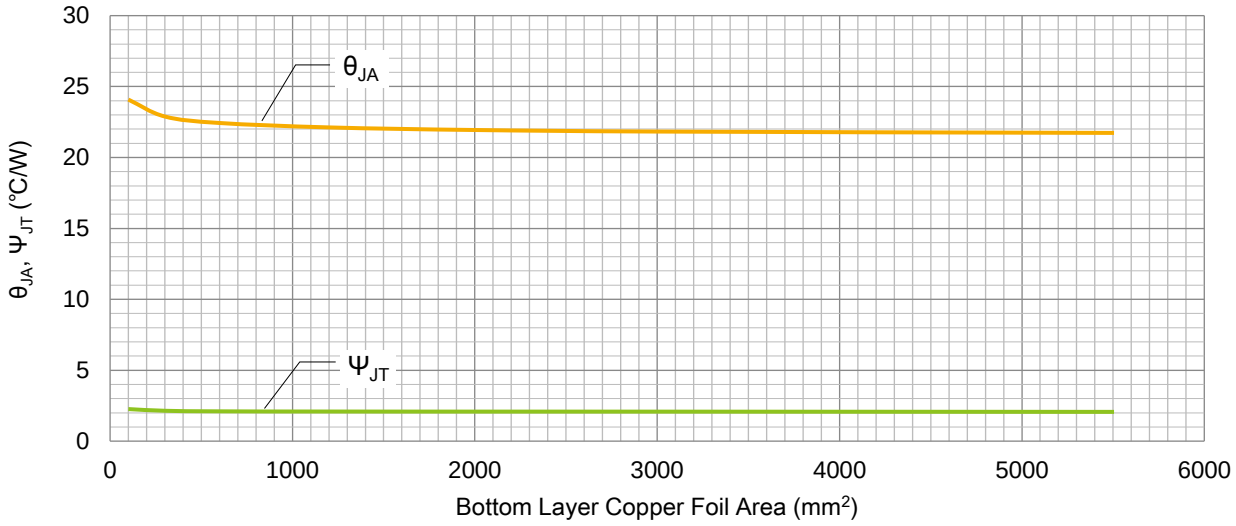

Figure 3-1-7-1. θ_{JA}, Ψ_{JT} vs 铜箔面积

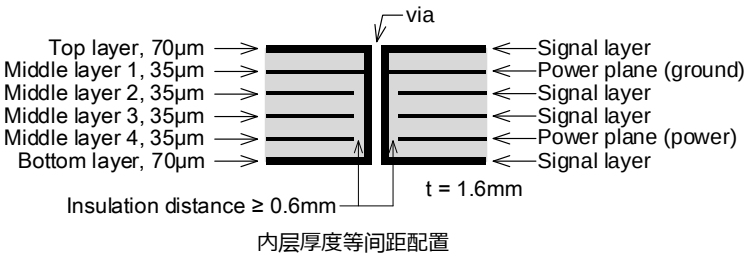

Figure 3-1-7-2. 6 层基板截面图

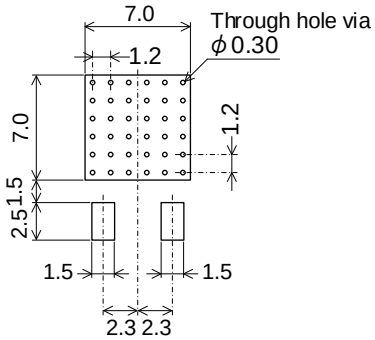

Figure 3-1-7-3. Footprint 尺寸

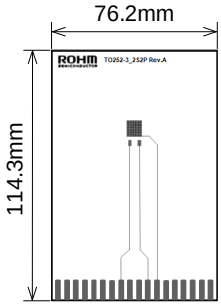

49 mm²
(Footprint)

Figure 3-1-7-4. Top layer

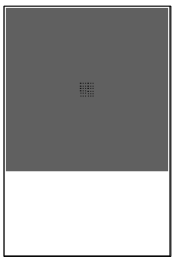

5505 mm²
(74.2 mm × 74.2 mm)

Figure 3-1-7-5. Middle layer 1

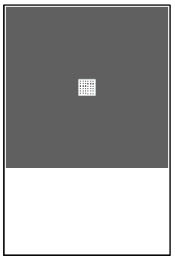

5505 mm²
(74.2 mm × 74.2 mm)

Figure 3-1-7-6. Middle layer 2, 3, 4

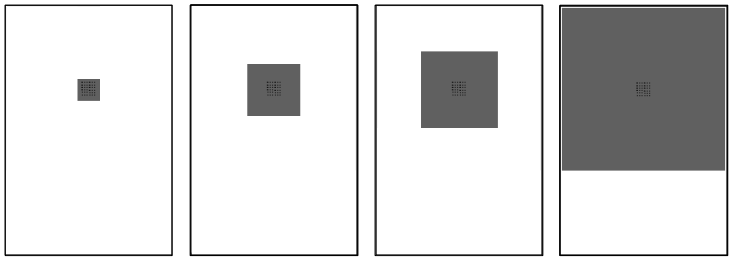

100 mm² (10 mm × 10 mm)
600 mm² (24.5 mm × 24.5 mm)
1200 mm² (34.6 mm × 34.6 mm)
5505 mm² (74.2 mm × 74.2 mm)

Figure 3-1-7-7. Bottom layer

© 2022 ROHM Co., Ltd.

3-1. 铜箔面积的变化（继续）

3-1-8. 8 层、多层的铜箔面积变化的情况

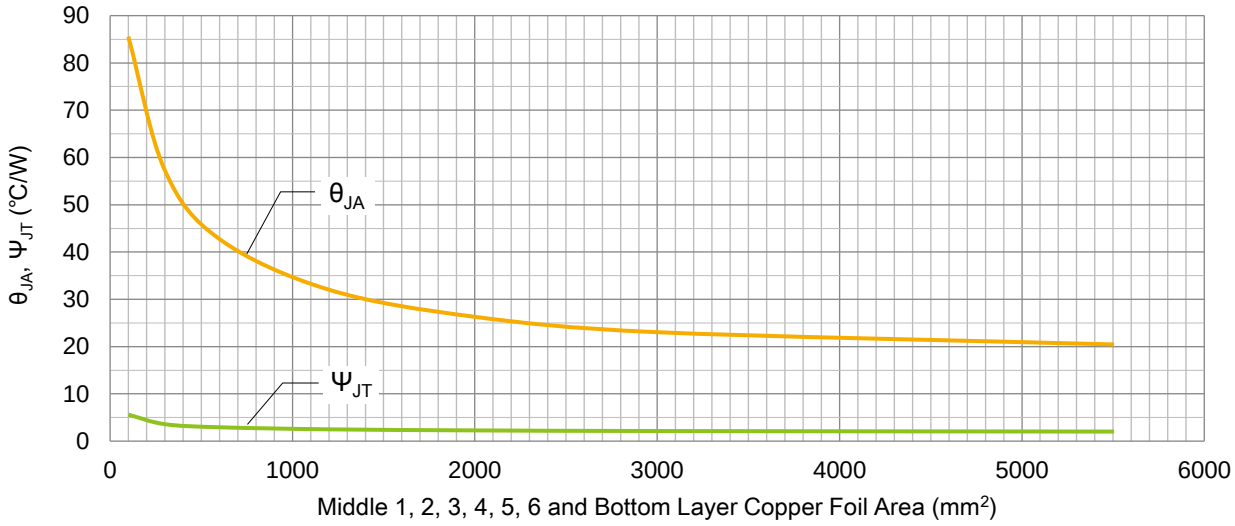

Figure 3-1-8-1. θ_{JA}, Ψ_{JT} vs 铜箔面积

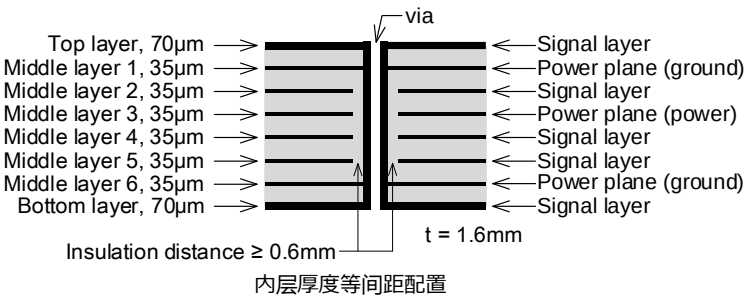

Figure 3-1-8-2. 8 层基板截面图

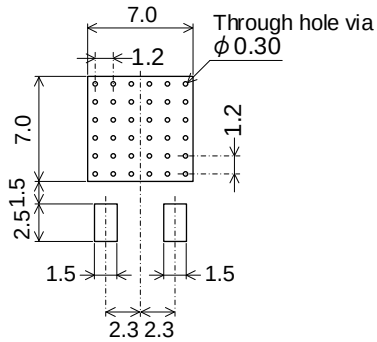

Figure 3-1-8-3. Footprint 尺寸

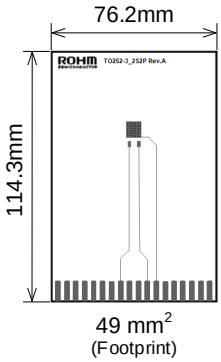

Figure 3-1-8-4. Top layer

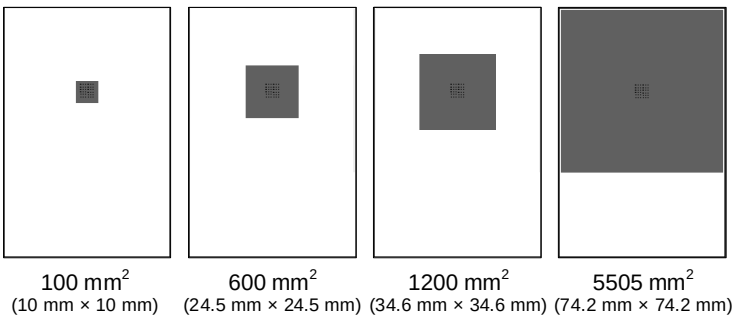

Figure 3-1-8-5. Middle layer 1, 6, Bottom layer

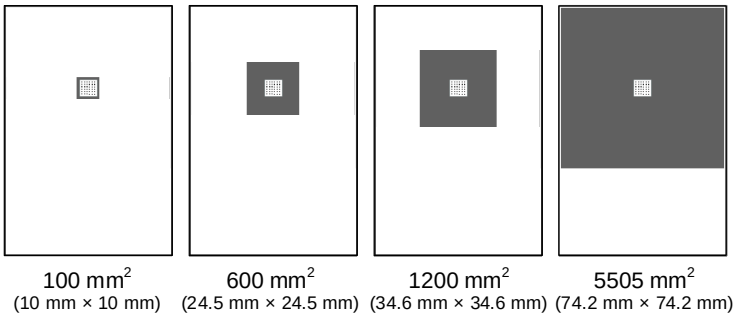

Figure 3-1-8-6. Middle layer 2, 3, 4, 5

© 2022 ROHM Co., Ltd.

3-1. 铜箔面积的变化（继续）

3-1-9. 8 层、仅 Bottom 层的铜箔面积变化的情况

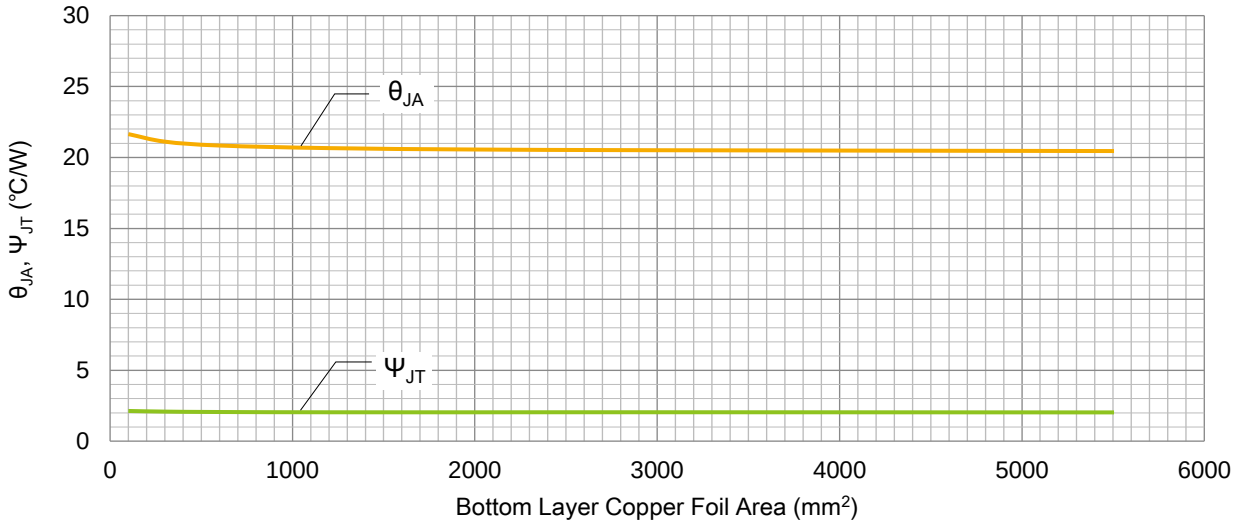

Figure 3-1-9-1. θ_{JA}, Ψ_{JT} vs 铜箔面积

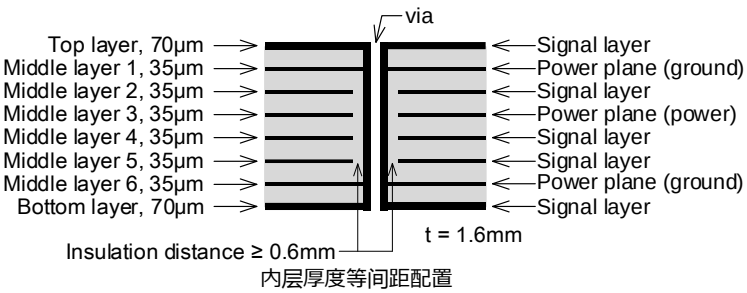

Figure 3-1-9-2. 8 层基板截面图

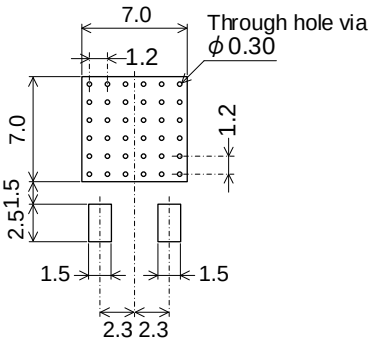

Figure 3-1-9-3. Footprint 尺寸

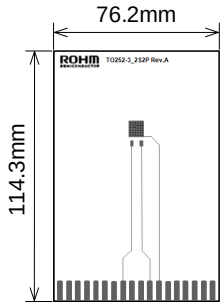

49 mm²
(Footprint)

Figure 3-1-9-4. Top layer

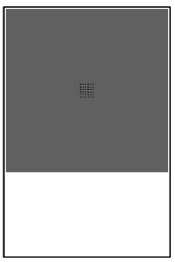

5505 mm²
(74.2 mm × 74.2 mm)

Figure 3-1-9-5. Middle layer 1, 6

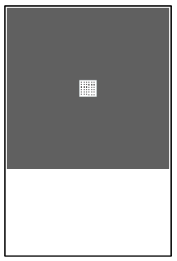

5505 mm²
(74.2 mm × 74.2 mm)

Figure 3-1-9-6. Middle layer 2, 3, 4, 5

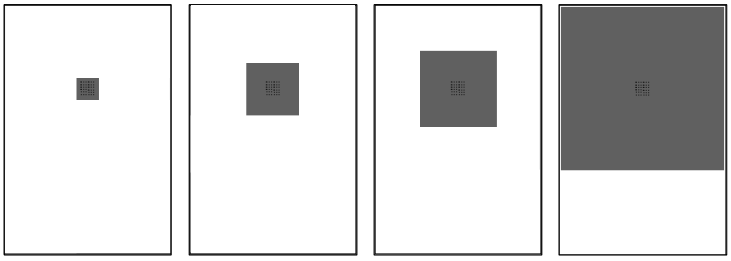

100 mm² (10 mm × 10 mm)
600 mm² (24.5 mm × 24.5 mm)
1200 mm² (34.6 mm × 34.6 mm)
5505 mm² (74.2 mm × 74.2 mm)

Figure 3-1-9-7. Bottom layer

© 2022 ROHM Co., Ltd.

3-2. 铜箔厚度的变化

3-2-1. 1 层

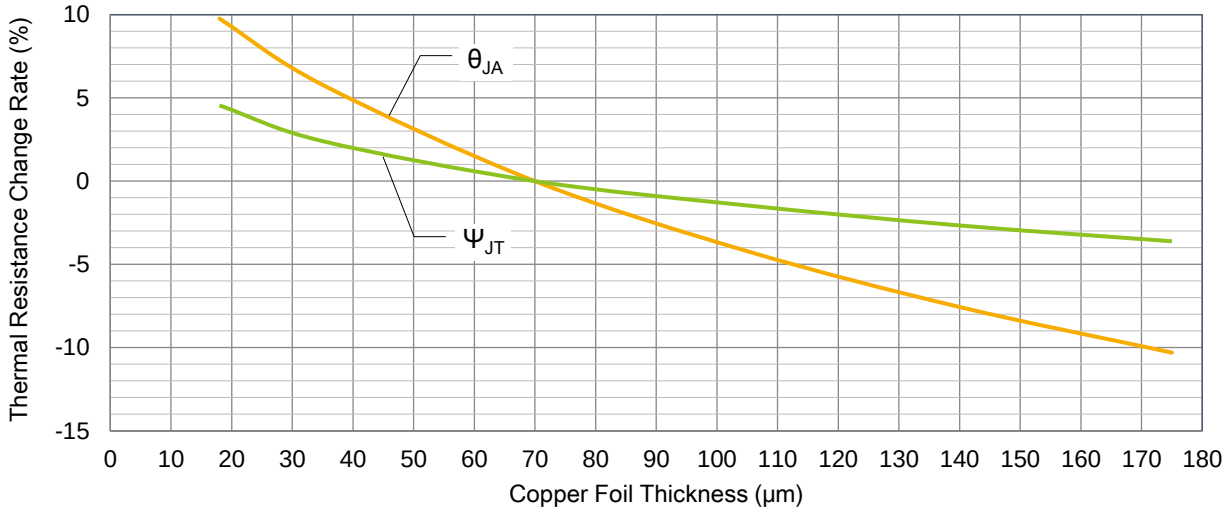

Figure 3-2-1-1. θ_{JA}, Ψ_{JT} 变化率 vs 铜箔厚度

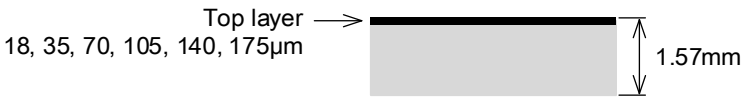

Figure 3-2-1-2. 1 层基板截面图

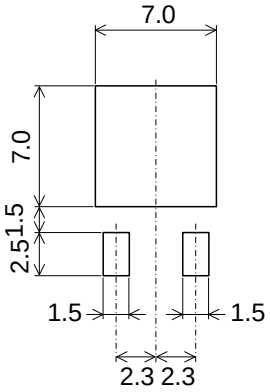

Figure 3-2-1-3. Footprint 尺寸

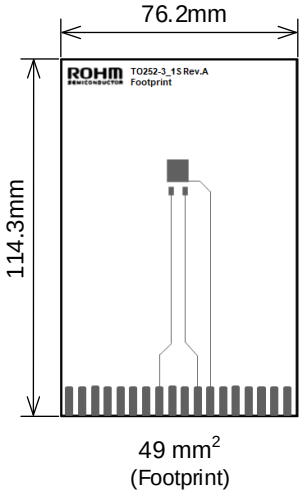

Figure 3-2-1-4. Top layer

3-2. 铜箔厚度的变化（继续）

3-2-2. 2 层

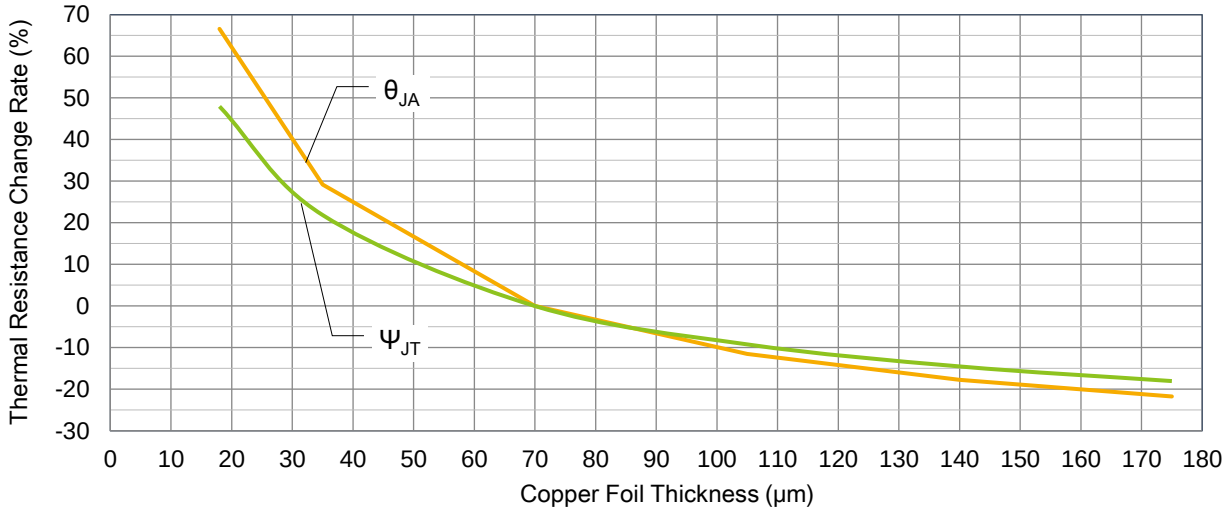

Figure 3-2-2-1. θ_{JA}, Ψ_{JT} 变化率 vs 铜箔厚度

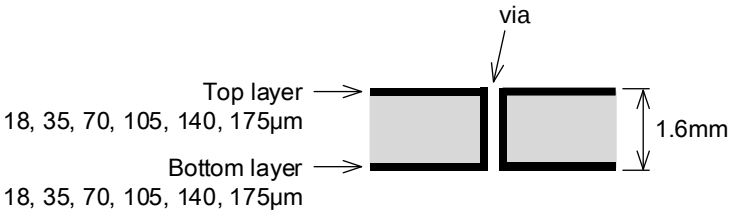

Figure 3-2-2-2. 2 层基板截面图

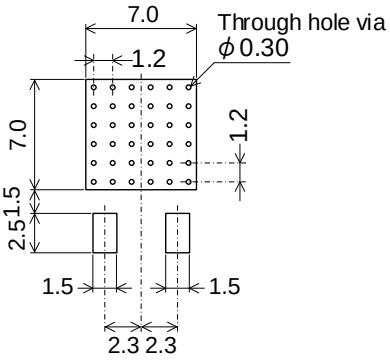

Figure 3-2-2-3. Footprint 尺寸

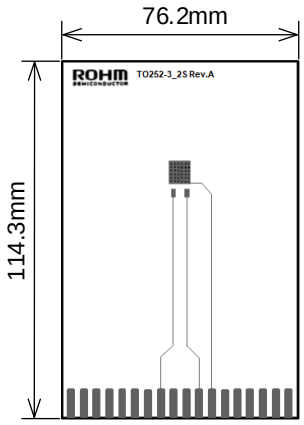

49 mm^2
(Footprint)

Figure 3-2-2-4. Top layer

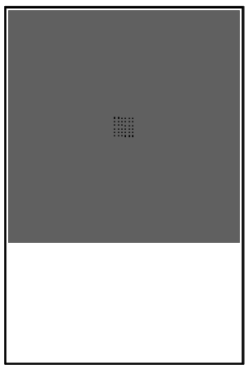

5505 mm^2
(74.2 mm × 74.2 mm)

Figure 3-2-2-5. Bottom layer

© 2022 ROHM Co., Ltd.

3-2. 铜箔厚度的变化（继续）

3-2-3. 4 层

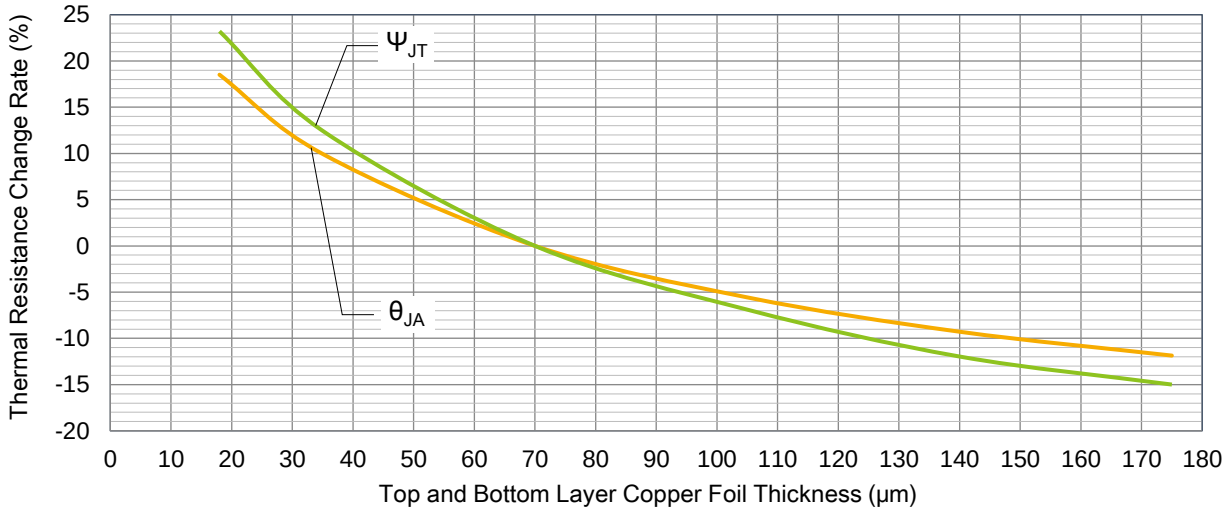

Figure 3-2-3-1. θ_{JA}, Ψ_{JT} 变化率 vs 铜箔厚度

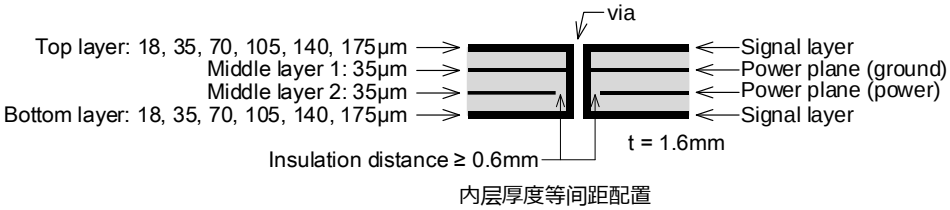

Figure 3-2-3-2. 4 层基板截面图

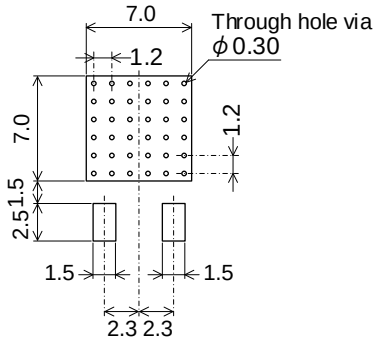

Figure 3-2-3-3. Footprint 尺寸

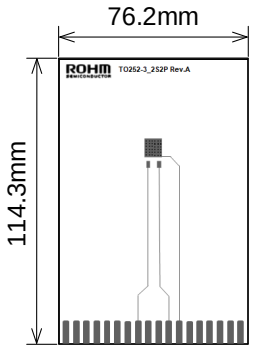

49 mm^2
(Footprint)

Figure 3-2-3-4.
Top layer

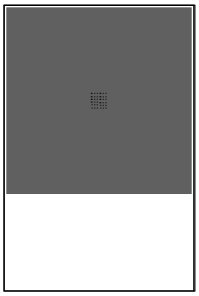

5505 mm^2
(74.2 mm × 74.2 mm)

Figure 3-2-3-5.
Middle layer 1

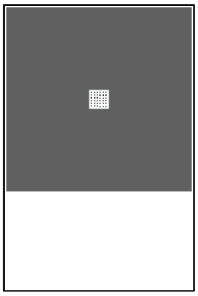

5505 mm^2
(74.2 mm × 74.2 mm)

Figure 3-2-3-6.
Middle layer 2

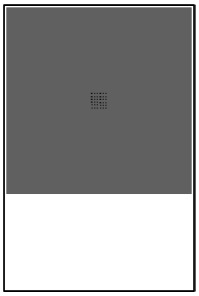

5505 mm^2
(74.2 mm × 74.2 mm)

Figure 3-2-3-7.
Bottom layer

© 2022 ROHM Co., Ltd.

3-3. 热通孔配置

3-3-1. 2 层

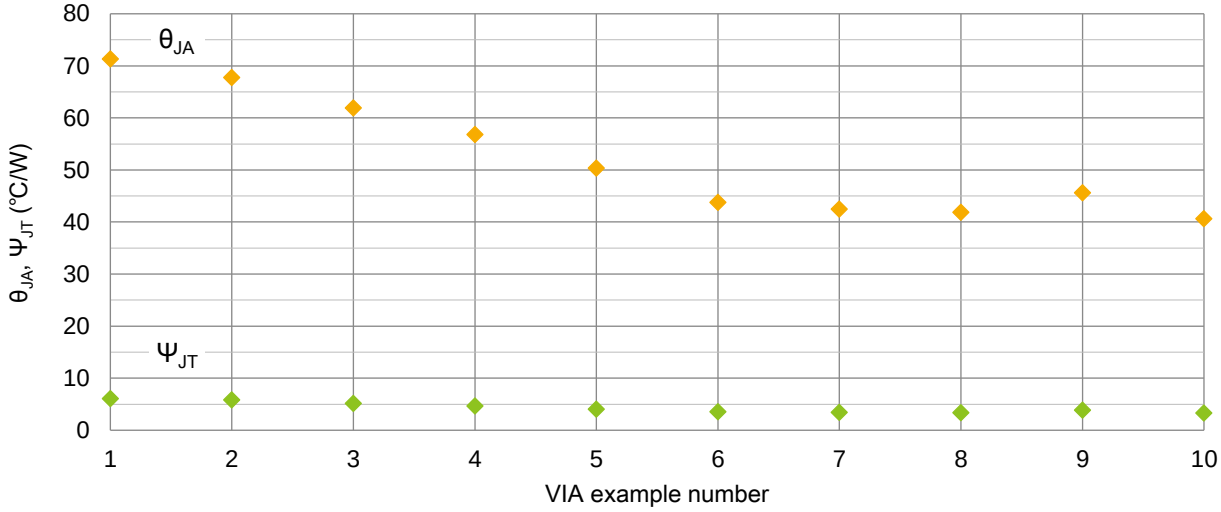

Figure 3-3-1-1. θ_{JA}, Ψ_{JT} vs 热通孔配置

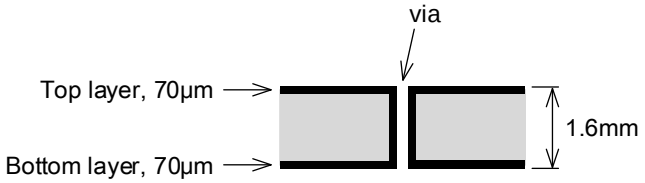

Figure 3-3-1-2. 2 层基板截面图

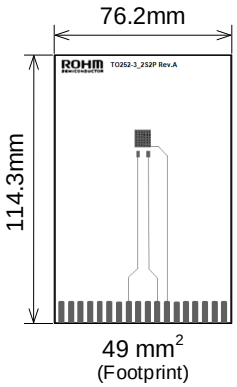

Figure 3-3-1-3.
Top layer

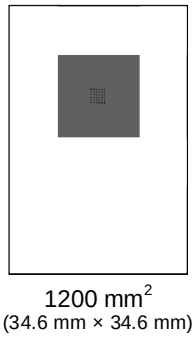

Figure 3-3-1-4.
Bottom layer

通孔示例的编号

■表示 FIN 部分的焊锡

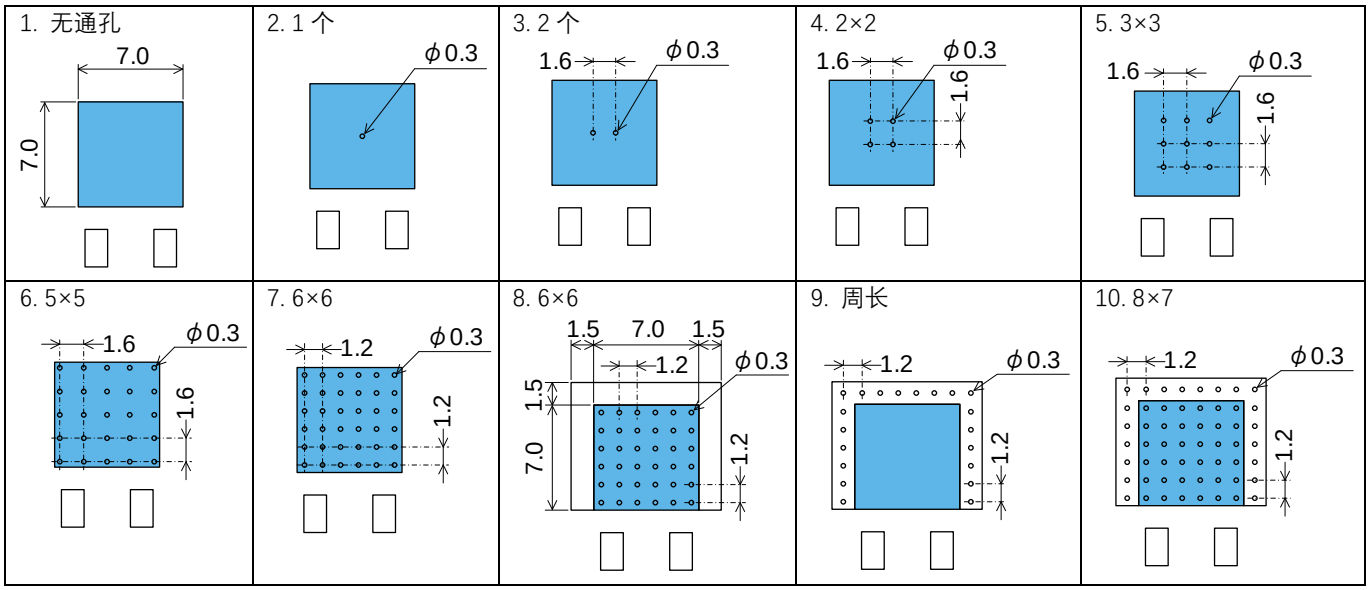

© 2022 ROHM Co., Ltd.

3-3. 热通孔配置（继续）

3-3-2. 4 层

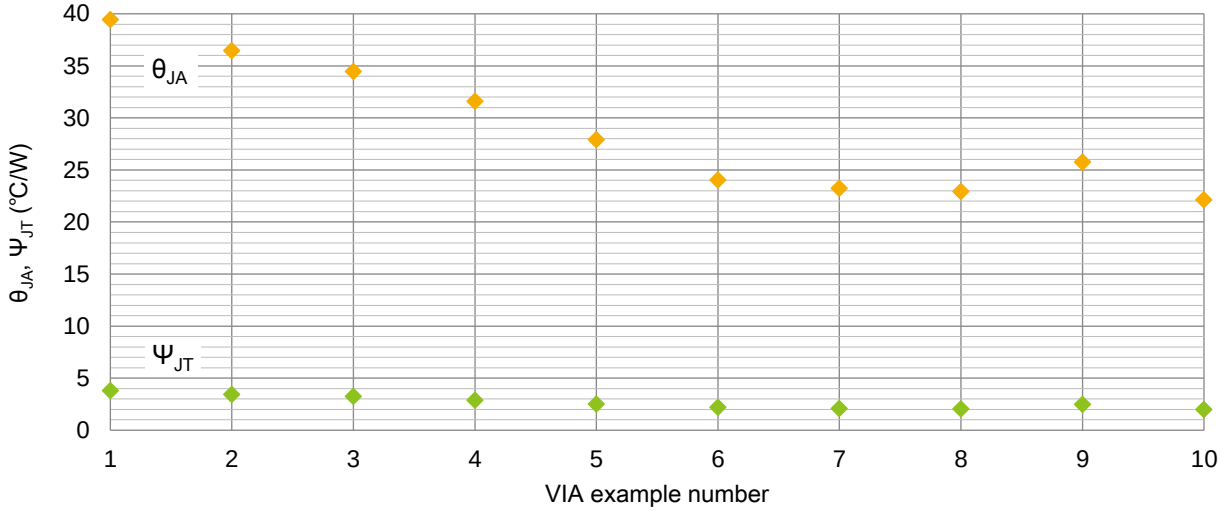

Figure 3-3-2-1. θ_{JA}, Ψ_{JT} vs 热通孔配置

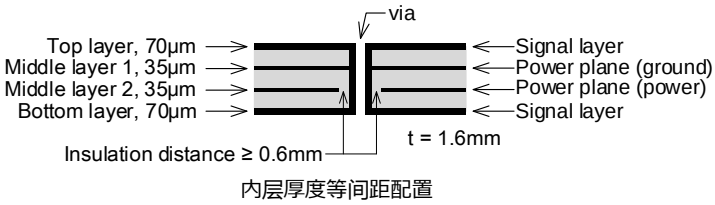

Figure 3-3-2-2. 4 层基板截面图

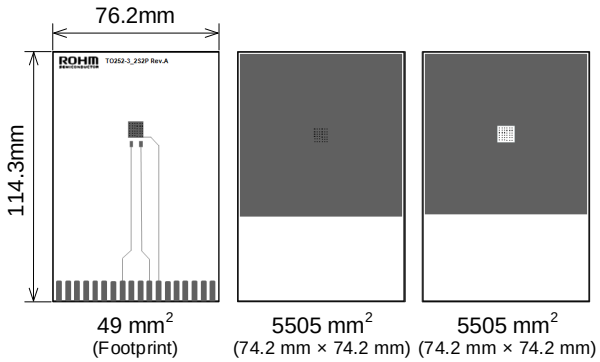

Figure 3-3-2-3. Top layer

Figure 3-3-2-4. Middle layer 1, Bottom layer

Figure 3-3-2-5. Middle layer 2

通孔示例的编号

表示 FIN 部分的焊锡

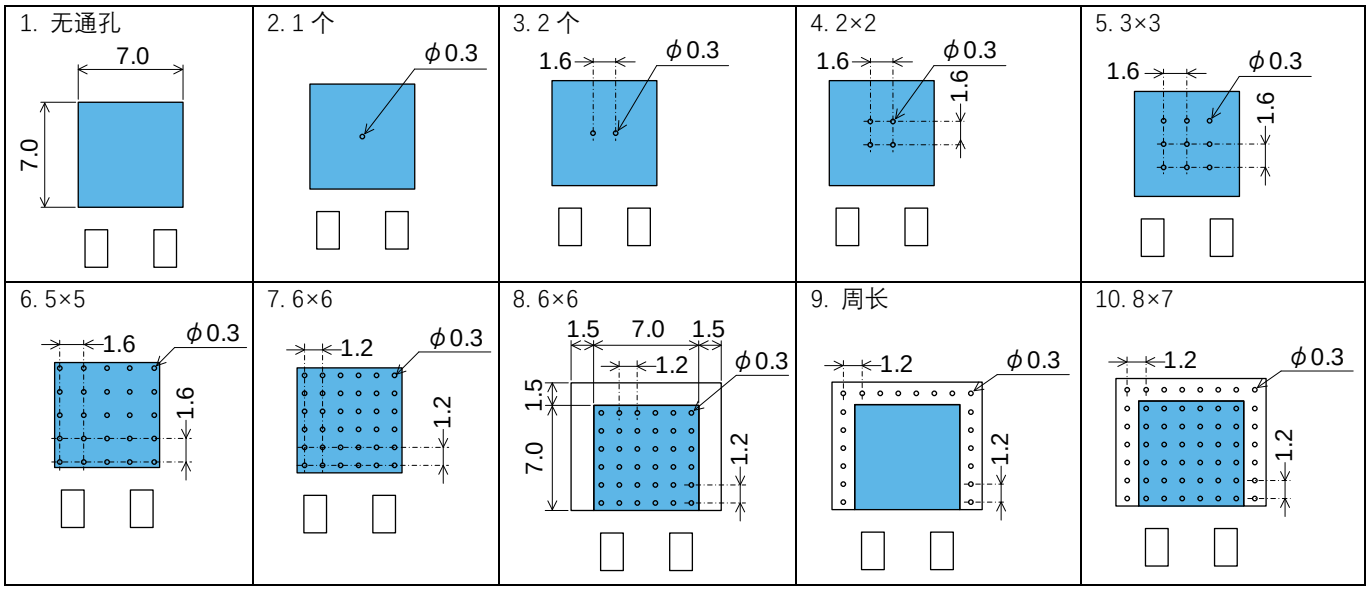

© 2022 ROHM Co., Ltd.

3-4. 基板厚度的变化

3-4-1. 1 层

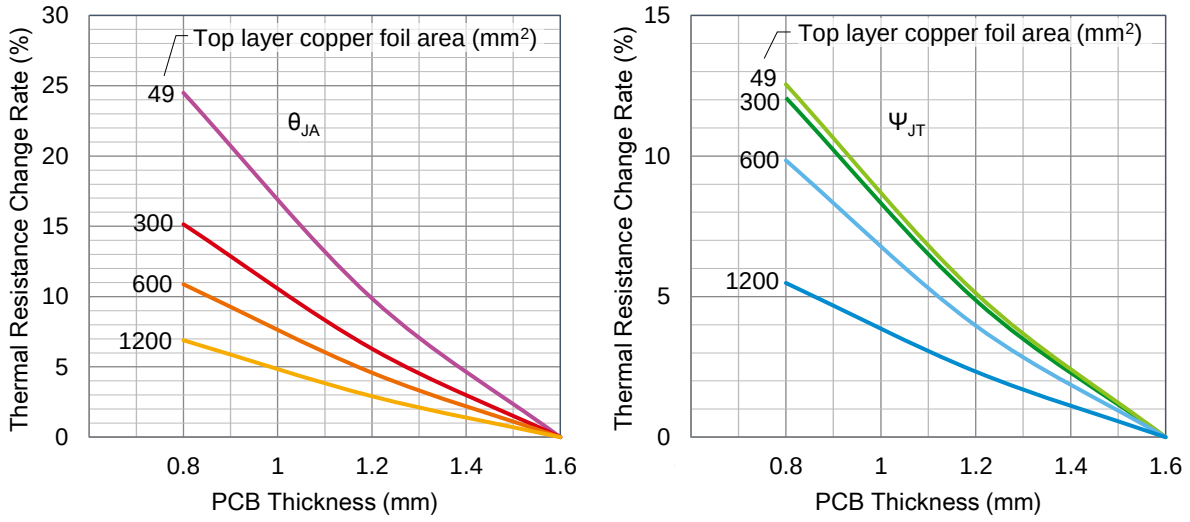

Figure 3-4-1-1. θ_{JA}, Ψ_{JT} 变化率 vs 基板厚度

Figure 3-4-1-2. 1 层基板截面图

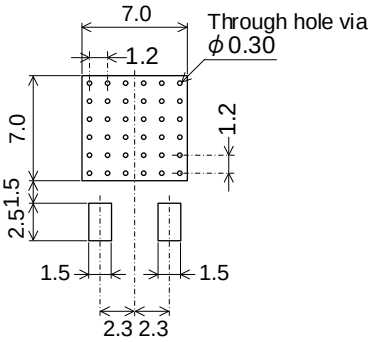

Figure 3-4-1-3. Footprint 尺寸

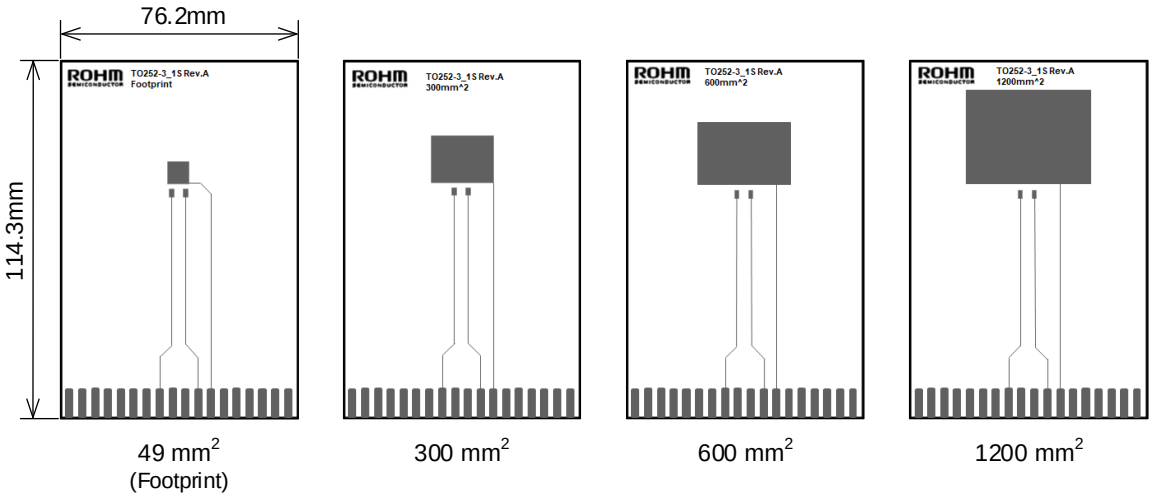

Figure 3-4-1-4. Top layer

3-4. 基板厚度的变化（继续）

3-4-2. 2 层

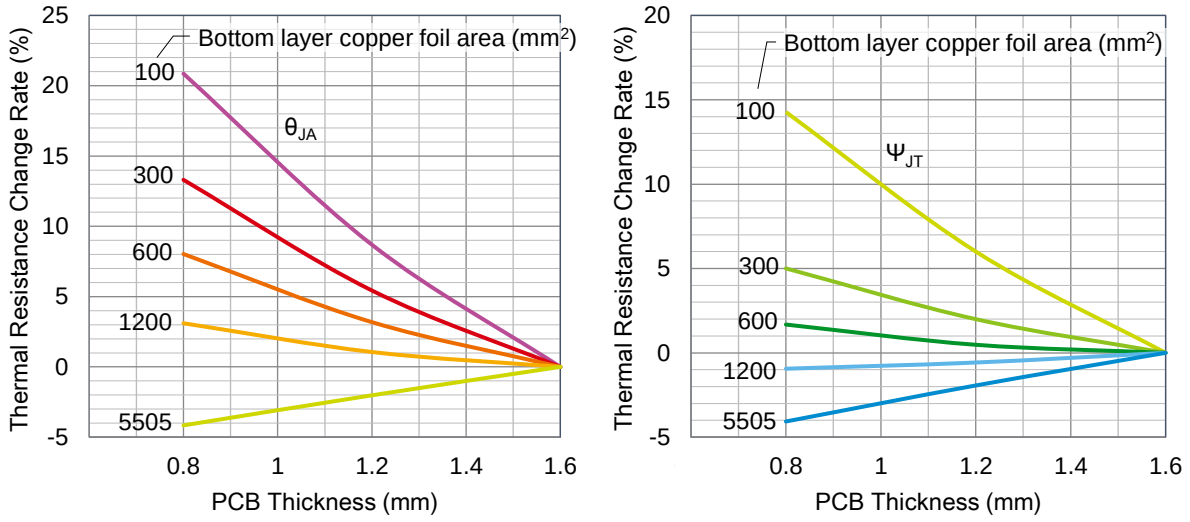

Figure 3-4-2-1. θ_{JA}, Ψ_{JT} 变化率 vs 基板厚度

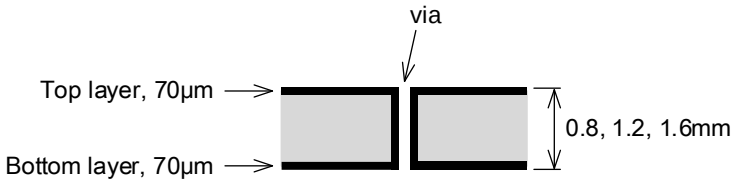

Figure 3-4-2-2. 2 层基板截面图

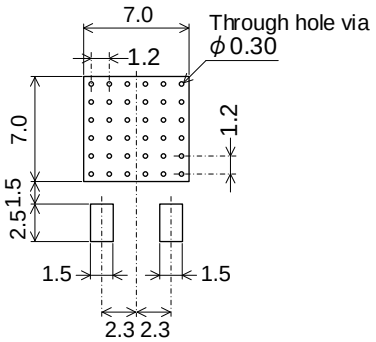

Figure 3-4-2-3. Footprint 尺寸

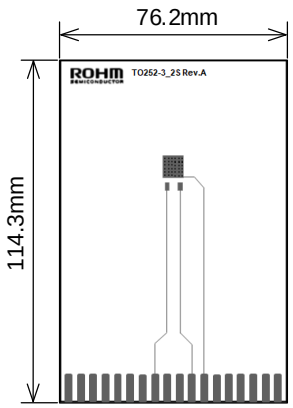

49 mm²
(Footprint)

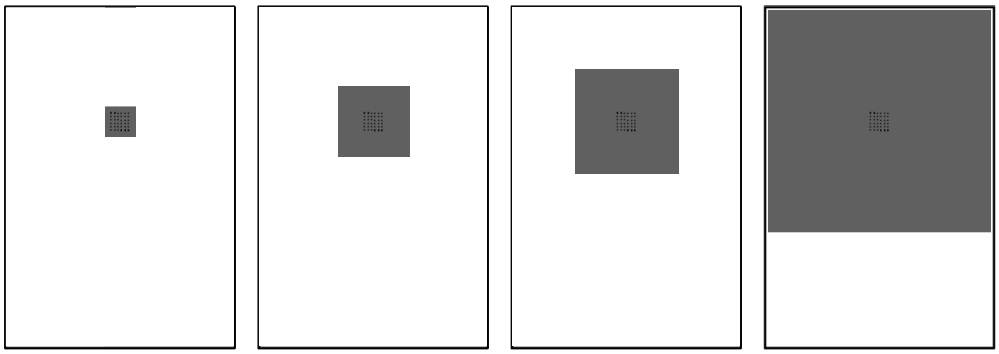

100 mm²
(10 mm × 10 mm)

600 mm²
(24.5 mm × 24.5 mm)

1200 mm²
(34.6 mm × 34.6 mm)

5505 mm²
(74.2 mm × 74.2 mm)

Figure 3-4-2-4. Top layer

Figure 3-4-2-5. Bottom layer

© 2022 ROHM Co., Ltd.

3-4. 基板厚度的变化（继续）

3-4-3. 4 层

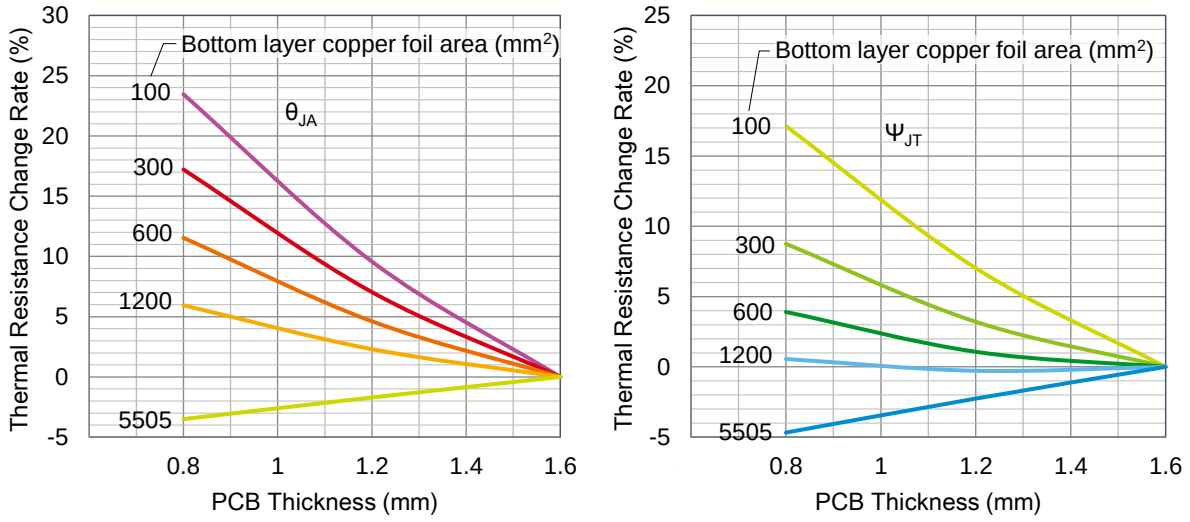

Figure 3-4-3-1. θ_{JA}, Ψ_{JT} 变化率 vs 基板厚度

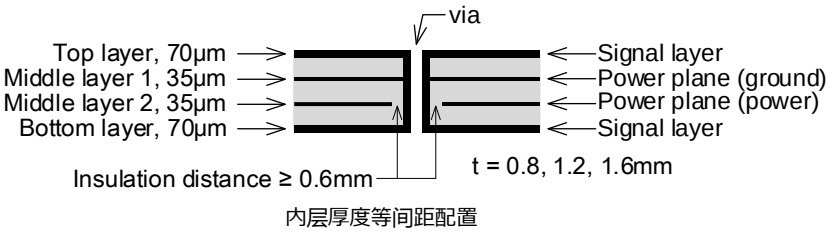

Figure 3-4-3-2. 4 层基板截面图

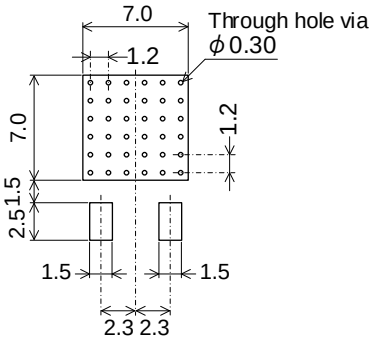

Figure 3-4-3-3. Footprint 尺寸

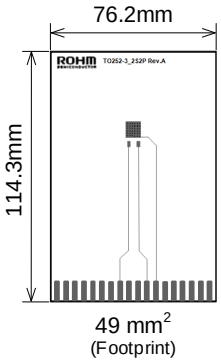

Figure 3-4-3-4. Top layer

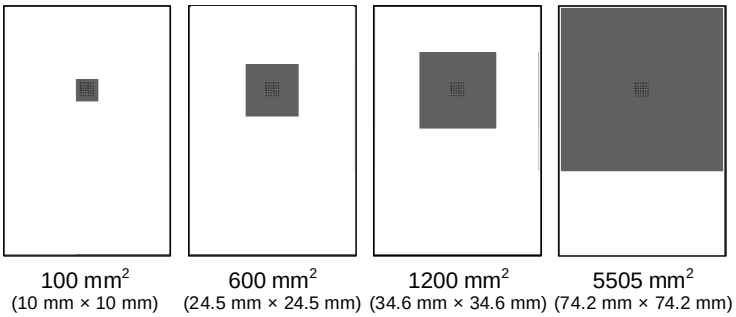

Figure 3-4-3-5. Middle layer 1, Bottom layer

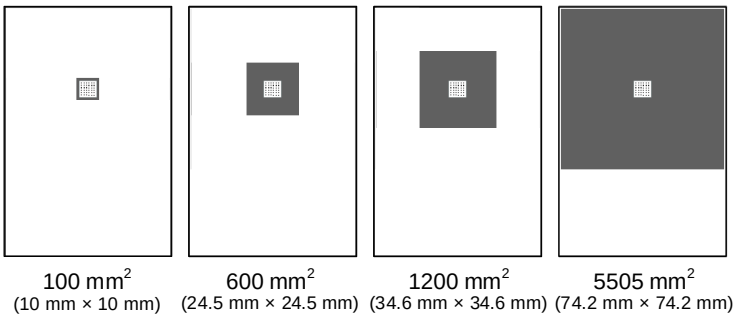

Figure 3-4-3-6. Middle layer 2

© 2022 ROHM Co., Ltd.

4. 瞬态热阻

坐标轴的说明

X 轴：Pulse width 是给系统供电的时间

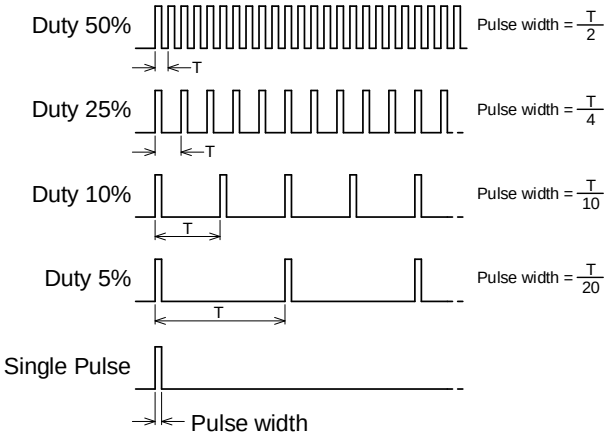

Y 轴：瞬态热阻

4-1. 瞬态热阻 1 层

Figure 4-1-1. 1 层基板截面图

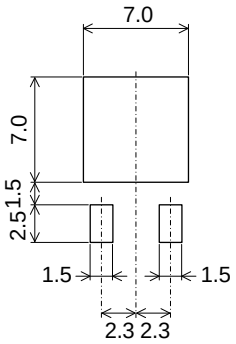

Figure 4-1-2. Footprint 尺寸

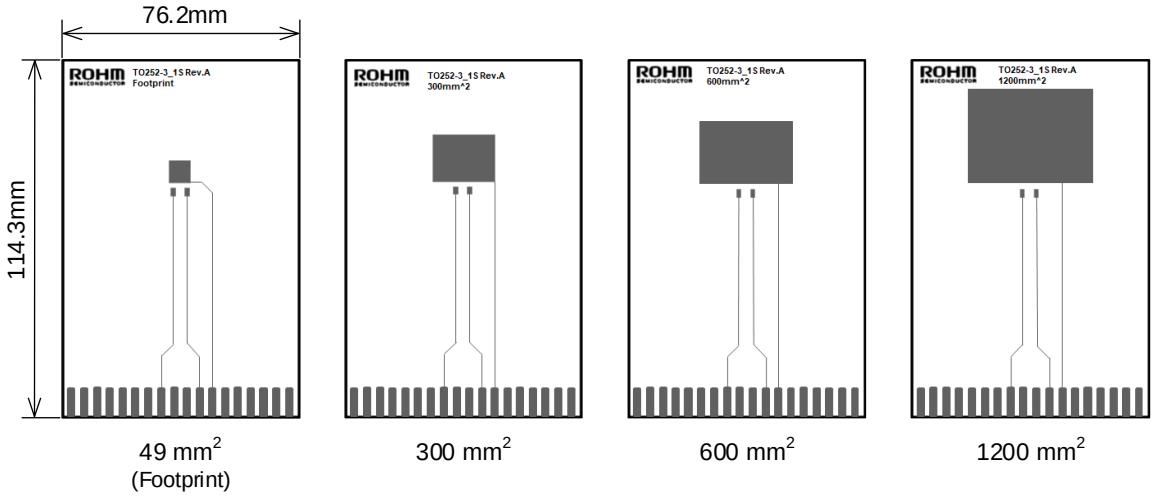

Figure 4-1-3. Top layer

4-1. 瞬态热阻 1 层（继续）

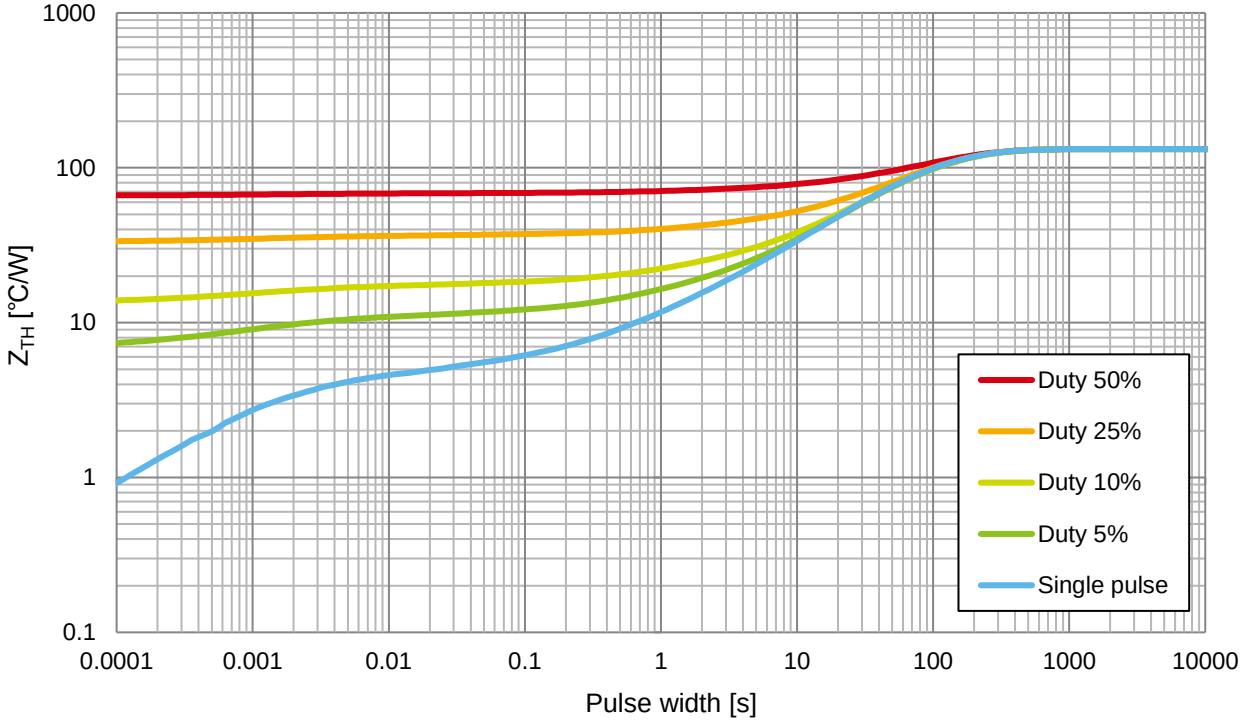

Figure 4-1-4. 瞬态热阻 1 层

铜箔面积 49mm^2 (Footprint)

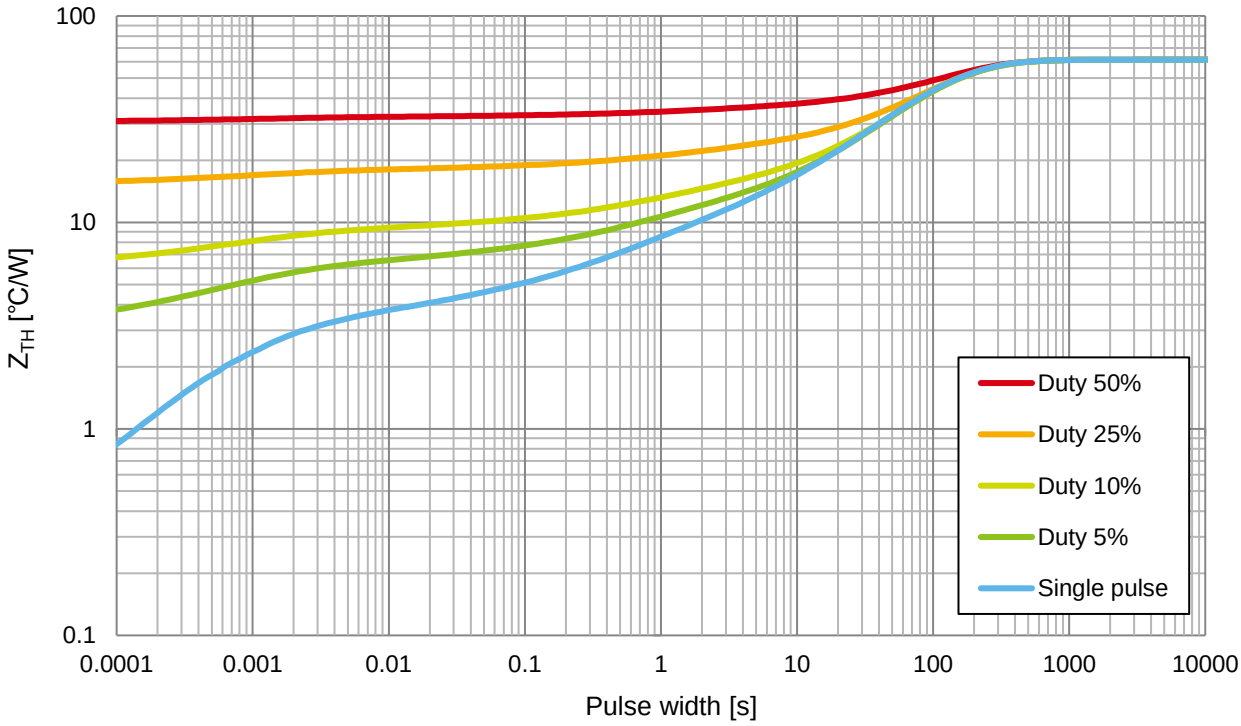

Figure 4-1-5. 瞬态热阻 1 层

铜箔面积 300mm^2

© 2022 ROHM Co., Ltd.

4-1. 瞬态热阻 1 层（继续）

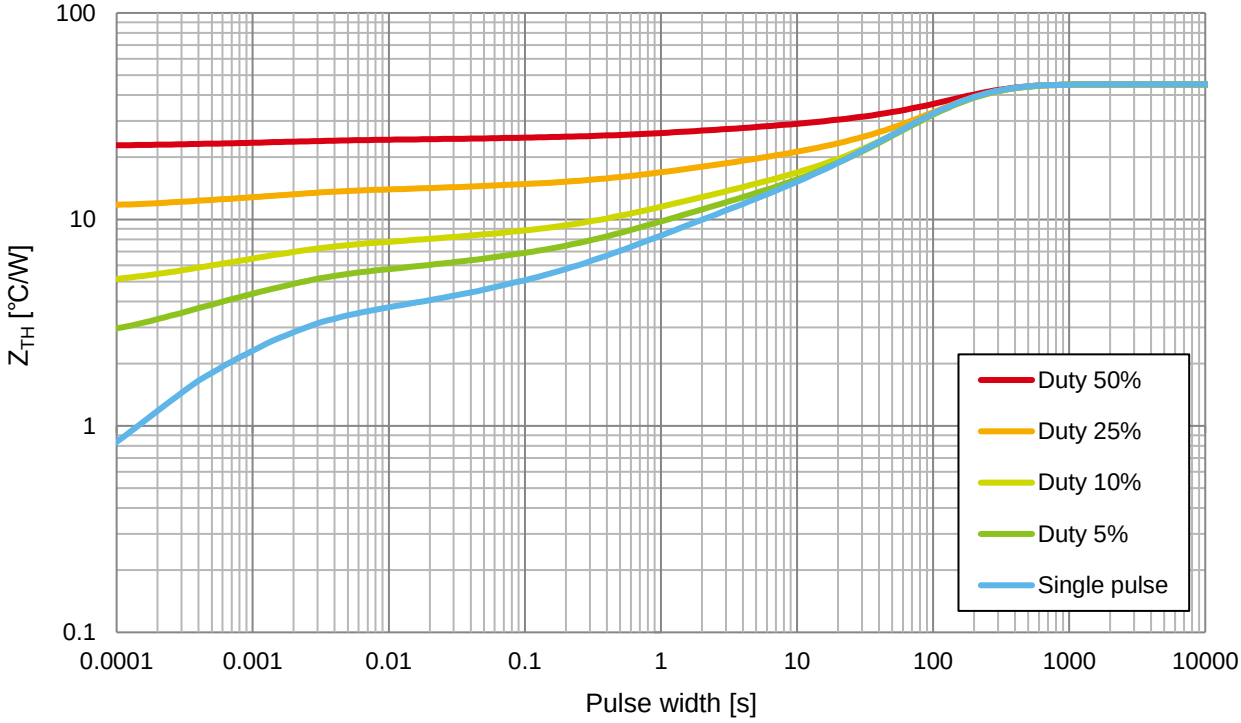

Figure 18. 瞬态热阻 1 层
铜箔面积 600mm^2

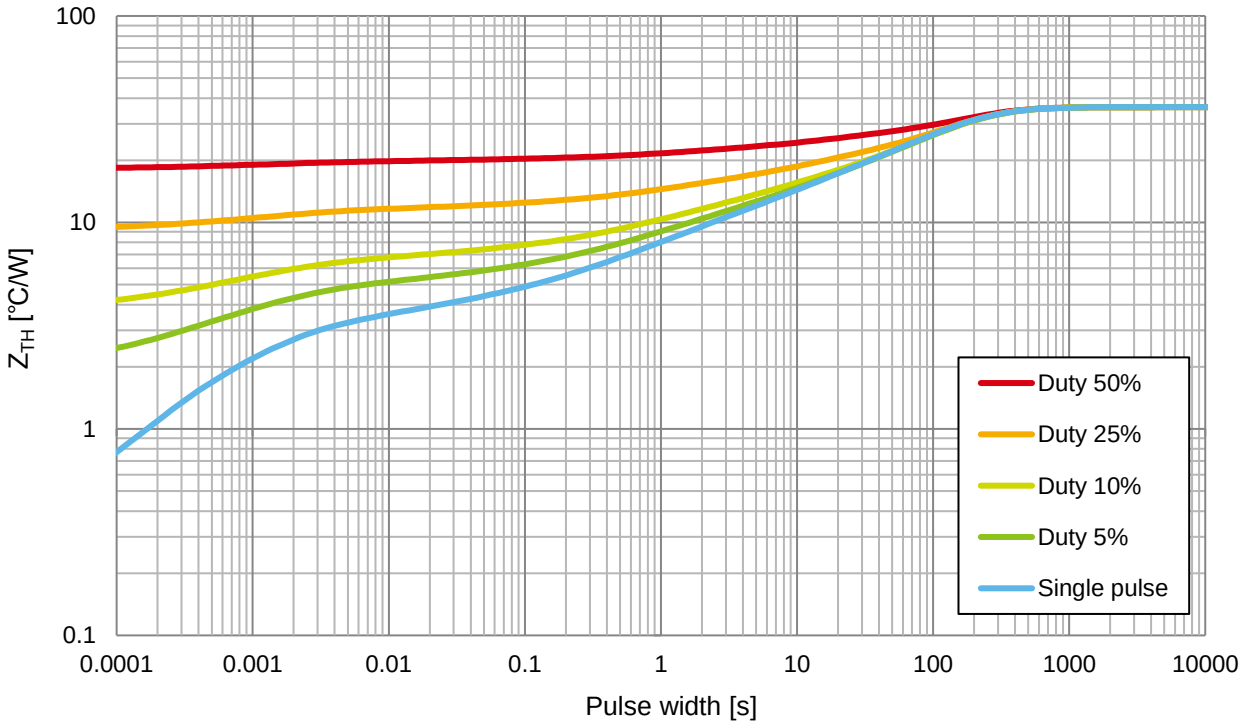

Figure 19. 瞬态热阻 1 层
铜箔面积 1200mm^2

© 2022 ROHM Co., Ltd.

4-2. 瞬态热阻 2 层

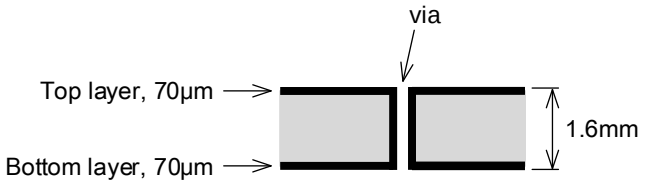

Figure 4-2-1. 2 层基板截面图

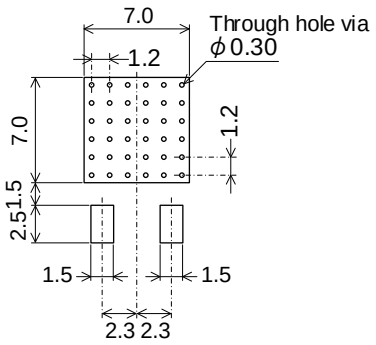

Figure 4-2-2. Footprint 尺寸

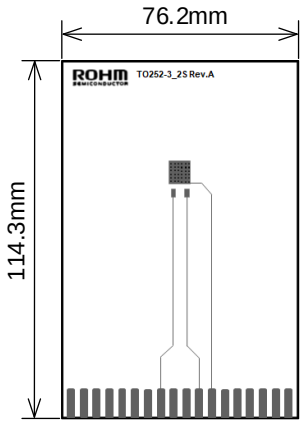

49 mm^2
(Footprint)

Figure 4-2-3. Top layer

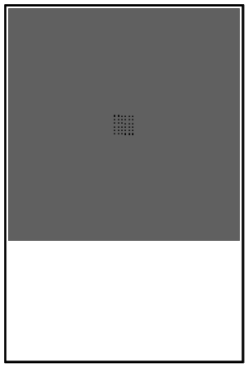

5505 mm^2
(74.2 mm × 74.2 mm)

Figure 4-2-4. Bottom layer

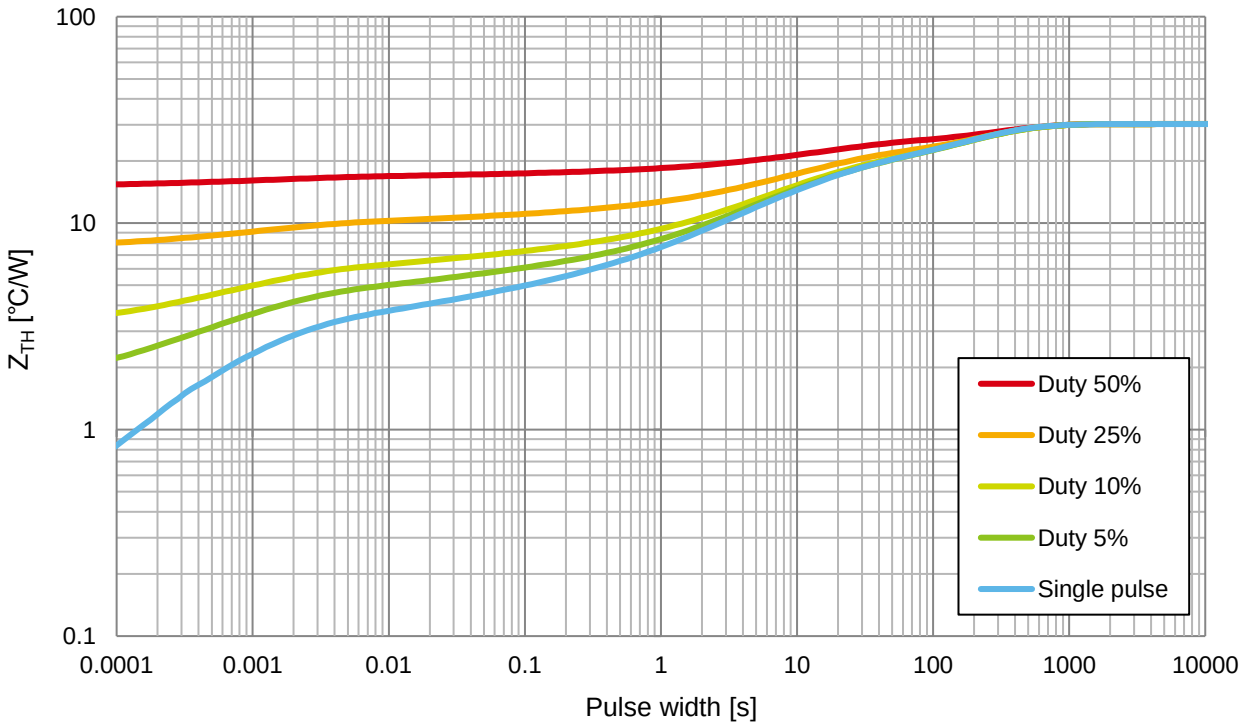

Figure 4-2-5. 瞬态热阻 2 层

© 2022 ROHM Co., Ltd.

4-3. 瞬态热阻 4 层

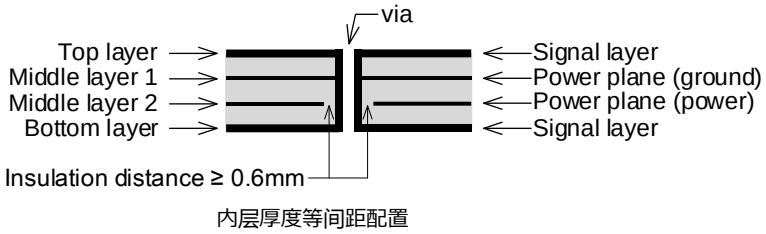

Figure 4-3-1. 4 层基板截面图

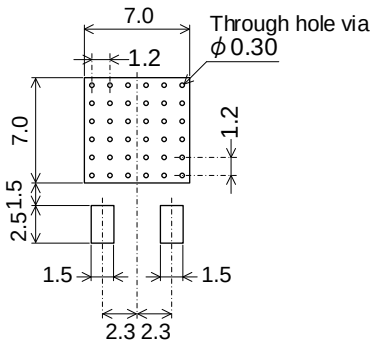

Figure 4-3-2. Footprint 尺寸

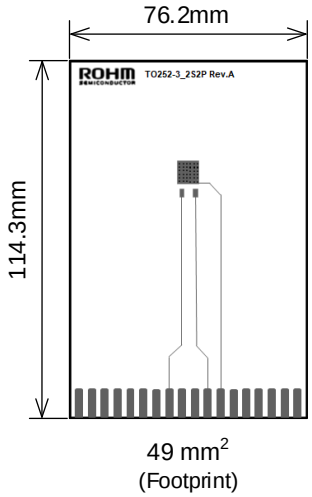

Figure 4-3-3.
Top layer

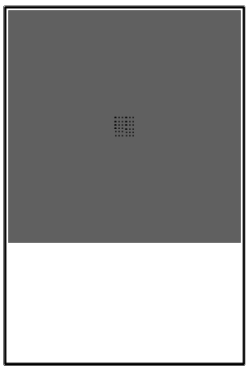

Figure 4-3-4.
Middle 1 layer

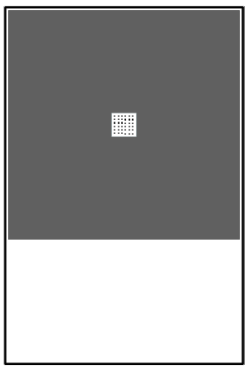

Figure 4-3-5.
Middle 2 layer

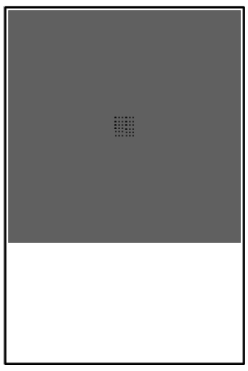

Figure 4-3-6.
Bottom layer

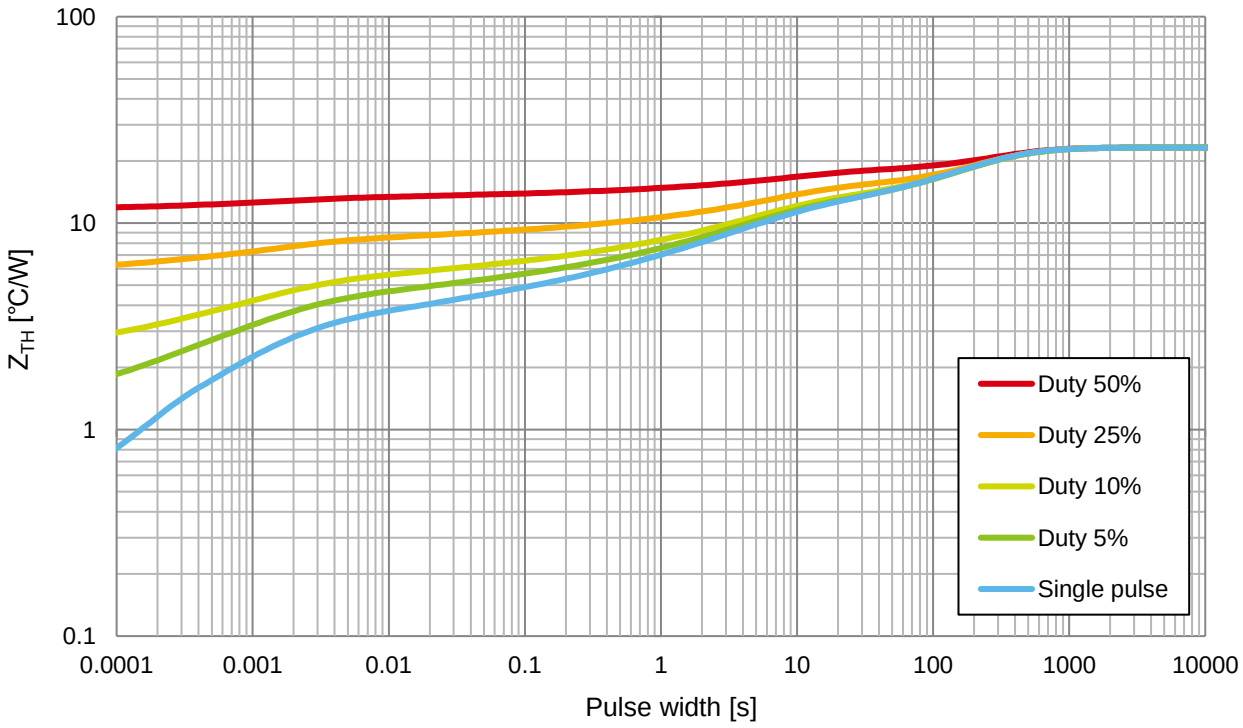

Figure 4-3-7. 瞬态热阻 4 层

Notes

1) The information contained herein is subject to change without notice.

2) Before you use our Products, please contact our sales representative and verify the latest specifications :

3) Although ROHM is continuously working to improve product reliability and quality, semiconductors can break down and malfunction due to various factors.
Therefore, in order to prevent personal injury or fire arising from failure, please take safety measures such as complying with the derating characteristics, implementing redundant and fire prevention designs, and utilizing backups and fail-safe procedures. ROHM shall have no responsibility for any damages arising out of the use of our Poducts beyond the rating specified by ROHM.

4) Examples of application circuits, circuit constants and any other information contained herein are provided only to illustrate the standard usage and operations of the Products. The peripheral conditions must be taken into account when designing circuits for mass production.

5) The technical information specified herein is intended only to show the typical functions of and examples of application circuits for the Products. ROHM does not grant you, explicitly or implicitly, any license to use or exercise intellectual property or other rights held by ROHM or any other parties. ROHM shall have no responsibility whatsoever for any dispute arising out of the use of such technical information.

6) The Products specified in this document are not designed to be radiation tolerant.

7) For use of our Products in applications requiring a high degree of reliability (as exemplified below), please contact and consult with a ROHM representative : transportation equipment (i.e. cars, ships, trains), primary communication equipment, traffic lights, fire/crime prevention, safety equipment, medical systems, servers, solar cells, and power transmission systems.

8) Do not use our Products in applications requiring extremely high reliability, such as aerospace equipment, nuclear power control systems, and submarine repeaters.

9) ROHM shall have no responsibility for any damages or injury arising from non-compliance with the recommended usage conditions and specifications contained herein.

10) ROHM has used reasonable care to ensure the accuracy of the information contained in this document. However, ROHM does not warrants that such information is error-free, and ROHM shall have no responsibility for any damages arising from any inaccuracy or misprint of such information.

11) Please use the Products in accordance with any applicable environmental laws and regulations, such as the RoHS Directive. For more details, including RoHS compatibility, please contact a ROHM sales office. ROHM shall have no responsibility for any damages or losses resulting non-compliance with any applicable laws or regulations.

12) When providing our Products and technologies contained in this document to other countries, you must abide by the procedures and provisions stipulated in all applicable export laws and regulations, including without limitation the US Export Administration Regulations and the Foreign Exchange and Foreign Trade Act.

13) This document, in part or in whole, may not be reprinted or reproduced without prior consent of ROHM.

Thank you for your accessing to ROHM product informations.
More detail product informations and catalogs are available, please contact us.

ROHM Customer Support System

https://www.rohm.com.cn/contactus

© 2016 ROHM Co., Ltd. All rights reserved.